AIR CURTAINS FOR CLIMATE SEPARATION

Catalogue

rosenberg ECOFIT ETRI
THE AIR MOVEMENT GROUP

airtècnics

INDEX

INTRODUCTION

Airtècnics	3
Benefits of air curtains	4
Airtècnics air curtains	5
Air curtains applications	6

AIR CURTAINS MODELS

Selection criteria	7
Air curtains models	8
Power coefficients	101
EC Technology	102

CONTROL

Advanced regulation	103
Multiple air curtains connection	106
Clever Control	107

REFERENCES AND DISTRIBUTORS

Gallery	109
Top References	113
Distributors	115

INTRODUCTION

Airtècnics

Founded in 1986 and placed in Castellar del Vallès (Barcelona), Airtècnics has a large experience producing air curtains, air handling units, fan boxes, fan filter units, axial fans, centrifugal fans and other special and OEM equipment.

Today, we offer the widest range of air curtains on the market, over 120 product families and 5,000 different models. We operate in over 60 countries with installations across all five continents.

Besides our own production, Airtècnics distributes a wide range of HVAC products, mostly produced by Rosenberg Group companies.

Airtècnics headquarters in Castellar del Vallès (Spain)

For decades, Airtècnics has been incorporating and innovating in technology for the production of air curtains, ventilation units, air purification devices and the rest of products of its catalogue.

Nowadays, we innovate in products that respond to the environmental hygiene needs that society is facing.

Loyal to our commitments regarding our customers, our products fulfill the highest standards of quality criteria.

We are proud of our highly qualified team composed by master engineers, designers, specialized technicians and skilled professionals, ready to assist you in any questions you may have in design, installation or maintenance requirements.

Be sure that Airtècnics or our worldwide distributors network will give you the right solution for any air curtains application.

- **Air curtains market leading**
- **Producing +40 years**
- **Exporting +60 countries**
- **Catalogue +25 languages**
- **Experimented R+D+i**
- **Continuous improving**
- **Complete range, all applications**
- **University knowledge collaboration**

The Rosenberg Group

Airtècnics is from 1993 fully integrated in the Rosenberg Group, an organization specializing in the design, manufacturing and distribution of equipments and components of ventilation and air conditioning with factories, subsidiaries and agencies in more than 50 countries.

Founded in 1981, currently with a total of 1.700 employees, 13 production sites on all continents, as well as 4 development centres. Rosenberg develops, produces and distributes its products worldwide.

Through a combination of human knowhow and innovative production technology Rosenberg products achieve a quality that meets the highest requirements.

Rosenberg headquarters in Künzelsau (Germany)

INTRODUCTION

Benefits of air curtains

Energy saving

- Reduces running cost and energy losses from the premises
- Reduce central plant capacity (heating/cooling)
- Reduces the CO2 emission
- Compliance with regulations and certifications

Confortable and healthy atmosphere

- Increases customers and staff comfort
- Helps maintain air quality and adequate enviroment
- Pest and insect control
- Barrier against dust, pollution, fumes and bad odours

Commercial profitability

- Sales increase due to the “open door effect”
- Doorway acts as a showcase window
- Easy access for people using wheelchair, strollers or umbrellas
- Increases usable space available on entrances

Increased safety

- Increase visibility and avoid obstacles
- Easy evacuation through the exit doorway
- In cold rooms reduce misting, and prevents ice forming
- Act as a barrier against fire smoke (special application)

PROTECT FROM :

Heat and cold from outside

Airborne dust

Smoke and fumes

Pests and insects

Bad odours

Wind drafts

MAINTAIN:

Thermal comfort (heating /cooling)

Energy efficiency

Air quality and security

Commercial profitability

Visibility and accessibility

Compliance with regulations

INTRODUCTION

Airtècnics air curtains

The new and attractive generation of Airtècnics air curtains are the ideal solution to maintain a comfortable interior climate in commercial outlets and public buildings that need to keep their doors open.

Airtècnics air curtains create an air stream layer over the doorway and act as an invisible barrier which efficiently divides the inside environment from the outside one. Therefore, it substantially reduces heating and cooling costs up to 80%, while increasing employees and clients comfort.

For shops, Airtècnics air curtains allow a clear view of the inside of the shop, welcoming the client to enter easily and freely.

The end result is more customers and an increase in sales. Airtècnics air curtains are a protection from the cold and heat, repel gusts of wind and minimize dust, fumes, pollution and insects entering the building.

In order to obtain these advantages it's very important to choose the appropriate air curtain. Factors such as interior pressure, strong winds, the door's location, stairs between floors, opposite doors, and the installation height have to be taken into consideration.

Our expert consultants with their extensive experience are at your disposal to help you choose.

Characteristics

Wide range: Whatever your application, we have an air curtain to suit it.

Control and regulation: Controls with attractive design and compact dimensions. Basic or sophisticated remote controls with manual or automatic functioning for energy saving applications. BMS interface. Controls can operate with devices as door contact, room thermostat, valves, anti-freezing sensor, etc.

Elegant and compact: Commercial models or decorative air curtains easy to match with any architectural interiors.

Finishes: Painted in any colour, different materials (stainless steel, wood, aluminium, etc.), different inlet grilles, etc.

Customization: Offer the possibility to brand an entrance with corporate logos or slogans, insert signs, clocks, lights, etc.

Low noise level: Our units offer a low noise level with higher performance. We use high quality fans and motors together with adequate regulation, specific geometry, etc.

Easy and quick installation: Minimum installation time with external Plug & Play connections. Threaded nuts assembled on the unit for easy fixing.

Reduced maintenance: Only regular cleaning.

Quality: 100% of the air curtains are tested and verified. Our products are marked CE, in compliance with the directives and applicable regulations.

Selection app: Airtècnics has developed exclusive software to help you select the right air curtain according to the specific characteristics and location of the installation.

Online calculator: Estimates the energy and economic savings resulting from the use of an efficient air curtain in a door.

Short delivery time: Our big stock of components allows us to guarantee a reduced delivery time for our standard products. Our flexible structure gives us the possibility to help our client on urgent projects.

INTRODUCTION

Air curtains applications

Climate separation

First and foremost, air curtains are designed to prevent a climate area (heated or cooled) from the influx of outside air through an open doorway. The air curtains reduce energy costs by keeping heated or cooled air in the internal building atmosphere. Efficient air curtains will save up to 80% energy looses across a doorway compared with a door without air curtain.

During winter an air curtain creates a barrier that keeps out the cold air, while in summer the air stream keeps out the hot air from outside. Bearing in mind the energy saved, the average payback time for an air curtain is between 1 and 5 years depending on usage and climate conditions.

Cold storage

Due to big temperature differences, it is highly recommended to install air curtains to reduce the energy losses when the door is open. The higher the temperature difference between inside/outside is, the higher energy losses are when a door is unprotected, with consequent economic loss and possible loss of goods. And for workers, potentially dangerous situations are created due to slippery floors, ice formation or low visibility.

Consult our separate catalogue "Air curtains for cold stores"

Pest and flying insect control

Pest control in food business, whether in the food industry, warehouses or establishments selling packaged or table-top food products, is of great importance. Insect air curtains are used, when necessary to prevent flying insects from entering to buildings like food processing plants, bakeries, restaurants, hospitals or clean zones.

Consult our separate catalogue "Air curtains for insect prevention"

Air curtains selection

To select an air curtain the following factors have to be kept in mind:

- The height of the installation measured from the air curtain discharge outlet to the floor.
- The width of the door.
- The location of the building to determine the level of protection needed against weather conditions.
- If the building has several doors in the same, different or opposite facade.
- If the building has several stores connected by escalators.
- Pressure differences between the inside and outside of the building.
- Door characteristics: Always opened, automatic door, manual door, revolving door, etc.
- Characteristics of the ventilation and air conditioning installation.
- Voltage and electrical power availability.
- Type of business, style and decoration of the premises.

The selection of a wrong unit means the air jet won't reach the floor and the separation of two adjacent areas will disappear. Then all heated/cooled air will cross the doorway and energy savings and all other advantages will be lost.
That makes it so, when factoring in heating costs, buying a cheap but inadequate model can cost more than buying a more expensive but optimal one. Another important point is customer satisfaction. For both business owners, workers and clients, a good air curtain is one that works well and achieves all the benefits listed in the previous sections.

For those reasons, it is important to choose an optimal air curtain, with the right specifications for the application.
The following section, as well as a selection program in Airtècnics' website, will help you chose the right air curtain for you.

AIR CURTAINS MODELS

Selection Criteria

MODEL	FANS TYPE	HEIGHT RANGE	HEATING A	HEATING E	HEATING P	HEATING DX	COMMON APPLICATIONS
Minibel		1,8 m	•	•			Kiosks, fast food and small sized places with usually closed door or automatic door when low pedestrian flow.
Optima Switch		2,2 - 2,8 m	•				Small and medium sized commercial doors with a medium pedestrian flow. Climate separation and protection against dust, fumes, and pollutants. Isolation and sealing of smoking areas.
Recessed Optima Switch			•				
Optima			•	•	•		
Recessed Optima			•	•	•		
Top		2,5 - 3,5 m	•	•	•		
Aris			•	•	•		
Recessed Aris			•	•	•		
Windbox							Medium and large sized commercial doors with a high pedestrian flow. Climate separation and protection against dust, fumes, and pollutants. Isolation and sealing of smoking areas. Multiple installation and false ceiling configurations.
Recessed Windbox							
Dam	M	2,5 - 3,5 m	•	•	•		
Recessed Dam							
Invisair	ECM	2,5 - 3,8 m	•	•	•	•	
Smart							
Zen	G	3,0 - 4,0 m	•	•	•		
Rund	ECG	3,0 - 4,2 m	•	•	•	•	
Rotowind							
Kool			•				
Recessed Compact			•				
Windbox							Medium and large commercial and industrial doors with a high pedestrian flow. Climate separation and protection against dust, fumes, and pollutants. Isolation and sealing of smoking areas. Multiple installation and false ceiling configurations.
Recessed Windbox							
Invisair	SB	3,5- 5 m	•	•	•	•	
Zen							
Rotowind	BB	5 - 7 m	•	•	•	•	
Kool							
Windbox	L	4 - 5 m	•	•	•	•	Medium and large industrial doors. Climate separation and protection against dust, fumes, and pollutants. Isolation and sealing of smoking areas. Multiple installation configurations.
Zen	LT	4 - 6 m	•	•	•	•	
	XL	5 - 7 m	•	•	•	•	
	XLT	5 - 8 m	•	•	•	•	
Maxwell	AC	4 - 6 m	•	•	•		Large industrial doors (warehouses, hangars, factories, logistic centres or loading bays). Horizontal or vertical installation.
	EC	5 - 8 m	•	•	•		

(A) Unheated, (E) Electric Heating, (P) Water Heating, (DX) Heat Pump

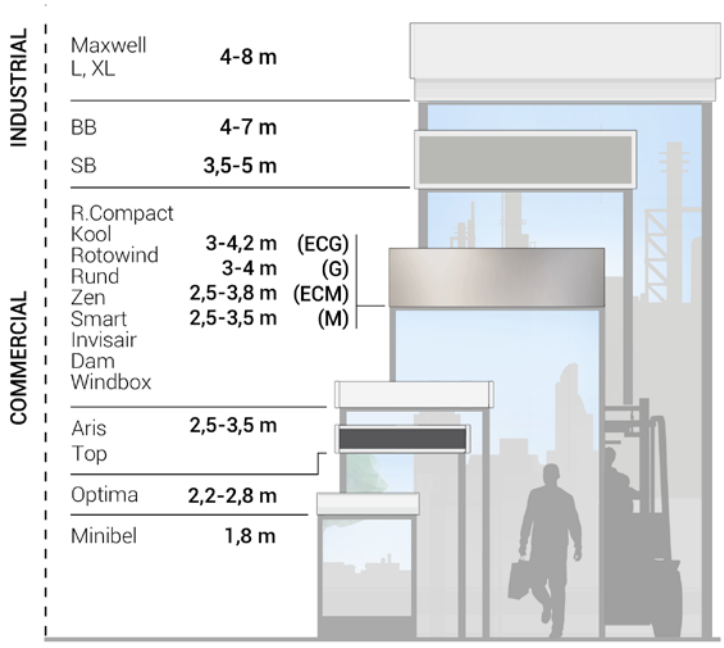

AIR CURTAINS MODELS

Model	Page
MINIBEL Standard air curtains for small openings	10-11
OPTIMA SWITCH Standard air curtains for commercial doors	12-13
RECESSED OPTIMA SWITCH Recessed air curtains for commercial doors	14-15
OPTIMA Standard air curtains for commercial doors	16-17
RECESSED OPTIMA Recessed air curtains for commercial doors	18-19
TOP Decorative air curtains for commercial doors	20-22
ARIS Standard air curtains for commercial doors	23-24
RECESSED ARIS Recessed air curtains for commercial doors	25-26
WINDBOX M,G High pressure standard air curtains for commercial doors	27-30
RECESSED WINDBOX M,G High pressure recessed air curtains for commercial doors	31-33
DAM High pressure standard air curtains for commercial doors	34-37
RECESSED DAM High pressure recessed air curtains for commercial doors	38-40
INVISAIR M,G High pressure recessed air curtains for commercial doors	41-44
SMART High pressure standard air curtains for commercial doors	45-47
ZEN M,G High pressure decorative air curtains for commercial doors	48-51
RUND High pressure decorative air curtains for commercial doors	52-55

AIR CURTAINS MODELS

Model	Page
ROTOWIND G High pressure tailor made air curtains for revolving doors	56-59
KOOL M,G High pressure standard air curtains for commercial and industrial doors	60-61
RECESSED COMPACT High pressure recessed air curtains for commercial and industrial doors	62-63
WINDBOX SB-BB High pressure standard air curtains for commercial and industrial doors	64-67
RECESSED WINDBOX SB-BB High pressure recessed air curtains for commercial and industrial doors	68-70
INVISAIR SB-BB High pressure recessed air curtains for commercial and industrial doors	71-74
ZEN SB-BB High pressure decorative air curtains for commercial and industrial doors	75-77
ROTOWIND SB-BB High pressure tailor made air curtains for revolving doors	79-82

Model	Page
KOOL SB-BB High pressure recessed air curtains for commercial and industrial doors	83-84
WINDBOX L,XL High pressure industrial air curtains for industrial doors	85-89
ZEN L,XL High pressure decorative air curtains for commercial and industrial doors	90-93
MAXWELL High pressure air curtains for large industrial doors	95-99

Technical Features

RAL 9016 standard

Other colors on request

Maximum range
AC : 1,8 m
EC : 2 m

Airflow / Length
420 - 900 m³/h
0,6 m to 0,9 m

Fan
Compact axial fans

Heating type
E : electrical 1 stage
A : unheated

Heating capacity
E : 2,5 - 3,2 kW

Control
Inbuilt switch for ventilation and heating control

Casing
Galvanised steel

Inlet grille
Circular with finger guard

Outlet lamellas
Aluminium, airfoil type

Power suppy cable integrated (1,5m length)

MINIBEL air curtain is suitable for installations where the opening of a small door or window is required while maintaining the air conditioning inside. Thus, it is the ideal complement to maintain the temperature in establishments such as kiosks, service windows such as toll booths or fast food, and small sized shops entrances. In addition, you can select the "E" model, which includes heating.
EC models assembled with negligible consumption efficiency fans.
All MINIBEL air curtains are supplied with wall supports.

UNHEATED

Model	Airflow	Ventilation power 230V~50Hz	Ventilation current 230V~50Hz	Noise level (5 m)	Weight
	m³/h	W	A	dB(A)	kg
MIN 600 A	420	60	0,52	46	9
MIN 900 A	630	90	0,78	49	12,5
MIN EC 600 A	600	26	0,24	54	9
MIN EC 900 A	900	39	0,36	55	12,5

ELECTRIC HEATED

Model	Airflow	Ventilation power 230V~50Hz	Ventilation current 230V~50Hz	Electrical heating capacity 230V~50Hz	Noise level (5 m)	Weight
	m³/h	W	A	kW	dB(A)	kg
MIN 600 E230	420	60	0,52	2,5	46	10
MIN 900 E230	630	90	0,78	3,2	48	13,5
MIN EC 600 E230	600	26	0,24	2,5	54	10
MIN EC 900 E230	900	39	0,36	3,2	56	13,5

Selection program

Dimensions

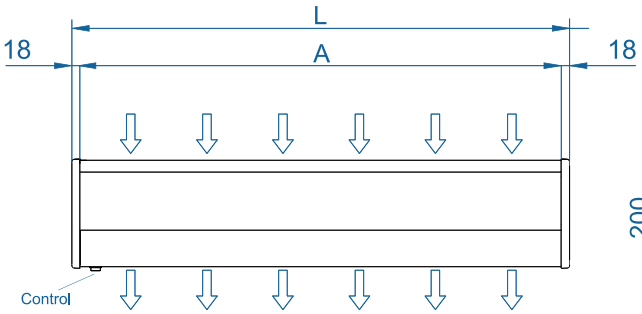

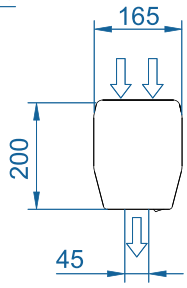

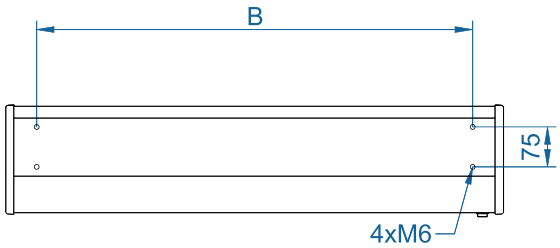

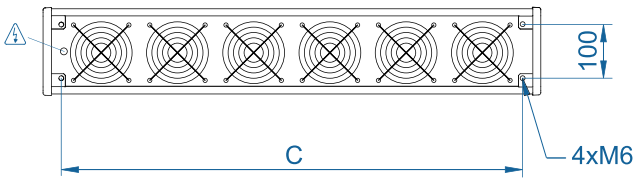

	L	A	B	C
MIN 600	636	600	520	566
MIN 900	936	900	820	866
MIN EC 600	636	600	520	566
MIN EC 900	936	900	820	866

Optional Accessories

Supports and installation

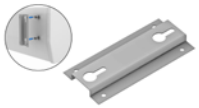

Omega wall support
SPT1

✔ Included

Silentblock support
SPANG SLB

CAD drawings, BIM files, installation manuals and other documentation

CAD BIM

Technical Features

RAL 9016 standard

Other colors on request

Maximum range
2,8 m

Airflow / Length
1500 - 2900 m³/h
1 m to 2 m

Fan
Tangential
2-speed

Heating type
A : unheated

Heating capacity
-

Control
Switch speed selector

Casing
Galvanised steel

Inlet grille
Micro-perforated with prefilter function

Outlet lamellas
Aluminium, airfoil type

OPTIMA SWITCH air curtain is ideal for most of the commercial entrances up to 2,8 meters high.
A small compact and low cost air curtain of elegant and friendly design with rounded shape and edges, with physical switch control.

It incorporates tangential fans with low noise twisted profile turbine and 2-speed external rotor motor.
Possibility to connect a door contact and/or an external OFF.

UNHEATED

Model	Airflow	Ventilation power 230V~50Hz	Ventilation current 230V~50Hz	Noise level (5 m)	Weight
	m³/h	W	A	dB(A)	kg
OPT SW 1000 A	1500	80	0,41	35/50	17,5
OPT SW 1500 A	2150	117	0,53	36/51	25,5
OPT SW 2000 A	2900	160	0,82	38/53	33

Selection program

Dimensions

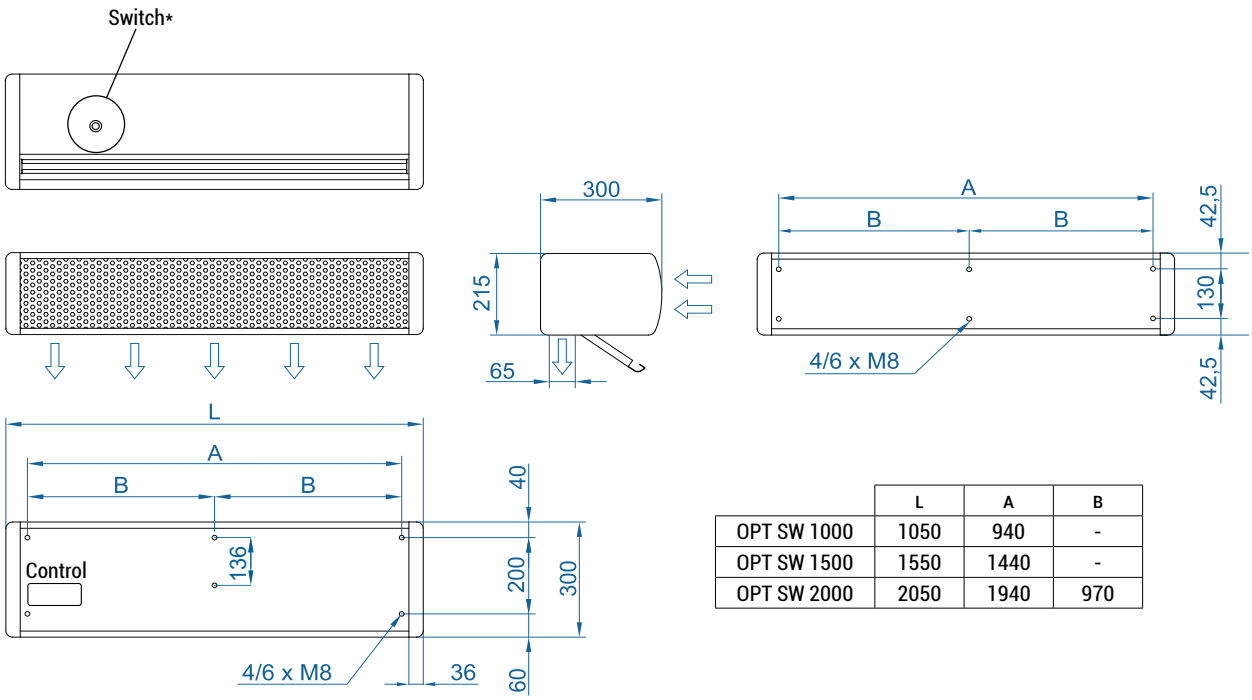

	L	A	B
OPT SW 1000	1050	940	-
OPT SW 1500	1550	1440	-
OPT SW 2000	2050	1940	970

Switch*

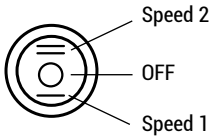

Optional accessories

Supports and installation

Wall rail support
SPWR

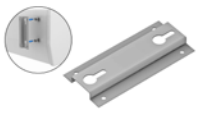

Omega wall support
SPT2

Silentblock supports
SPANG-SIL / SLB

Suspension cables
SPCT

Sensors and valves

Mechanical door contact
MEC-DC

Magnetic door contact
MAG-DC

CAD drawings, BIM files, installation manuals and other documentation

CAD BIM

Technical Features

Maximum range
2,8 m

Airflow / Length
1700 - 3200 m³/h
1 m to 2 m

Fan
Tangential
2-speed

Heating type
A : unheated

Heating capacity
-

Control
Switch speed selector

Casing
Galvanised steel

Inlet grille
Rectangular + circular perforated

Outlet lamellas
Aluminium, airfoil type

Standard:
Cover RAL 9016
RAL 9006

Other colors on request

Low cost unheated air curtain with the same performance as RECESSED OPTIMA.
RECESSED OPTIMA SWITCH air curtain is ideal for most of the commercial entrances up to 2,8 meters high, for false ceiling installation.

Inbuilt physical switch control. Inlet grille panel free of maintenance integrated in a single frame colour white RAL 9016 or black RAL 9005.
With low noise twisted profile turbine and 2-speed external rotor motor tangential fans.

UNHEATED

Model	Airflow	Ventilation power 230V~50Hz	Ventilation current 230V~50Hz	Noise level (5 m)	Weight
	m³/h	W	A	dB(A)	kg
RO SW 1000 A	1700	80	0,41	35/50	23
RO SW 1500 A	2200	117	0,53	36/51	33
RO SW 2000 A	3200	160	0,82	38/53	43

Selection program

Dimensions

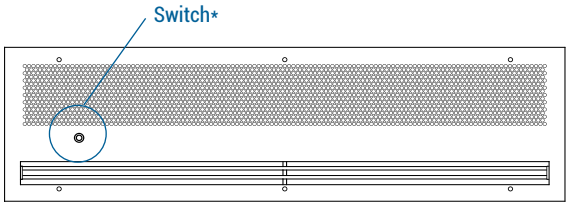

	L	L1	A	B
RO SW 1000	1000	1050	938	-
RO SW 1500	1500	1550	1438	-
RO SW 2000	2000	2050	1938	969

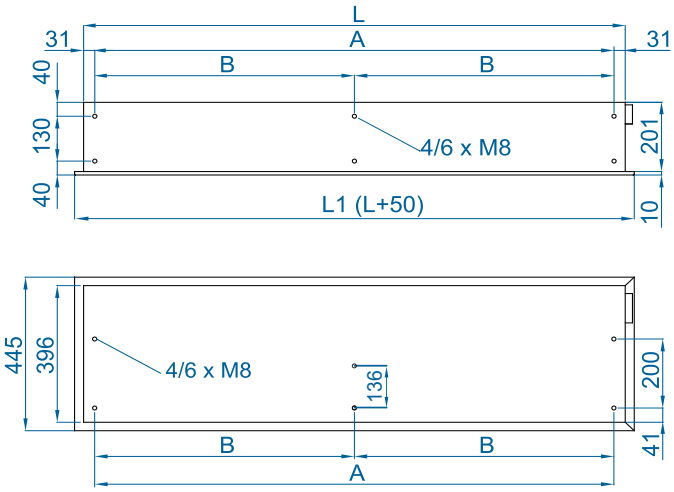

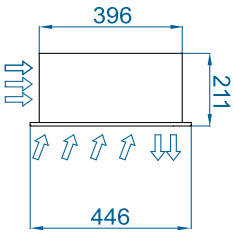

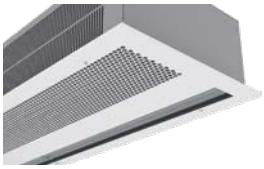

White Finish RAL 9016

Black Finish RAL 9005

Switch*

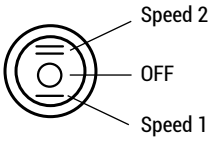

Optional Accessories

Supports and installation

Wall rail support
SPWR

Silentblock supports
SPANG-SIL / SLB

Suspension cables
SPCT

Sensors and valves

Mechanical door contact
MEC-DC

Magnetic door contact
MAG-DC

CAD drawings, BIM files, installation manuals and other documentation

CAD BIM

Technical Features

RAL 9016 standard

Other colors on request

Maximum range
2,8 m

Airflow / Length
1400 - 2900 m³/h
1 m to 2 m

Fan
Tangential
2-speed

Heating type
A : unheated
E : electrical 3 stages
P : water

Heating capacity
E : 1,9 - 11,3 kW
P : 8,2- 16,7 kW

Control
Plug&Play Advanced PRO
+ IR remote control
(Optional Clever Pro Control)

Casing
Galvanised steel

Inlet grille
Micro-perforated
with prefilter function

Outlet lamellas
Aluminium, airfoil type

OPTIMA air curtain is ideal for most of the commercial entrances up to 2,8 meters high. A small and compact air curtain of friendly design with rounded shape and edges. It incorporates tangential fans with low noise twisted profile turbine and 2-speed external rotor motor.
Advanced Plug&Play control. Includes: Advanced PRO control with LCD display and integrated thermostat, door contact, 7m RJ11 cable and remote control.
Optional: intelligent Clever PRO Control (automatic, programmable, modbus for PLC, timer, etc).

UNHEATED

Model	Airflow	Ventilation power 230V~50Hz	Ventilation current 230V~50Hz	Noise level (5 m)	Weight
	m³/h	W	A	dB(A)	kg
OPT 1000 A	1500	80	0,41	35/50	17,5
OPT 1500 A	2150	117	0,53	36/51	25,5
OPT 2000 A	2900	160	0,82	38/53	33

ELECTRIC HEATED

Model	Airflow	Electrical heating capacity (**)	Power supply	Ventilation power 230V~50Hz	Ventilation current 230V~50Hz	Noise level (5 m)	Weight
	m³/h	kW		W	A	dB(A)	kg
OPT 1000 E	1500	1,9/3,8/5,6	400Vx3	80	0,41	35/50	20,5
OPT 1000 E-9	1500	3/6/9	400Vx3	80	0,41	35/50	21,5
OPT 1000 E230	1500	1,9/3,8/5,6	230Vx1	80	0,41	35/50	20,5
OPT 1500 E	2150	3/6/9	400Vx3	117	0,53	36/51	27,5
OPT 1500 E230-6	2150	1,9/3,8/5,6	230Vx1	117	0,53	36/51	27,5
OPT 1500 E230-9	2150	3/6/9	230Vx1 (*)	117	0,53	36/51	27,5
OPT 2000 E	2900	3,8/7,5/11,3	400Vx3	160	0,82	38/53	42
OPT 2000 E230	2900	3,8/7,5/11,3	230Vx1 (*)	160	0,82	38/53	42

(*) 2 separated power supplies. (**) Under request other electrical heating power can be limited.

WATER HEATED

Model	Airflow	P86 (80/60ºC)		P64 (60/40ºC)		Ventilation power 230V~50Hz	Ventilation current 230V~50Hz	Noise level (5 m)	Weight
		Water heating capacity	Water pressure drop	Water heating capacity	Water pressure drop				
	m³/h	kW	Pa	kW	Pa	W	A	dB(A)	kg
OPT 1000 P86	1400	8,2	7090	-	-	80	0,41	37/51	20,5
OPT 1000 P64	1300	-	-	6,12	6030	80	0,41	37/51	20,5
OPT 1500 P86	2100	12,7	7200	-	-	117	0,53	38/52	27,5
OPT 1500 P64	2050	-	-	9,7	6040	117	0,53	38/52	27,5
OPT 2000 P86	2750	16,7	6550	-	-	160	0,82	40/54	37,5
OPT 2000 P64	2600	-	-	12,51	5320	160	0,82	40/54	37,5

Water heated: connection pipes 1/2" female. P86 of 2 rows coil. P64 of 3 rows coil. No model exceeds the 70dB of noise level.

Dimensions

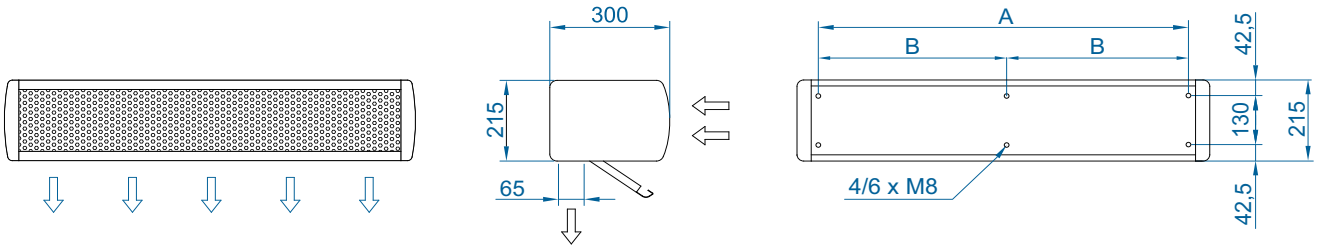

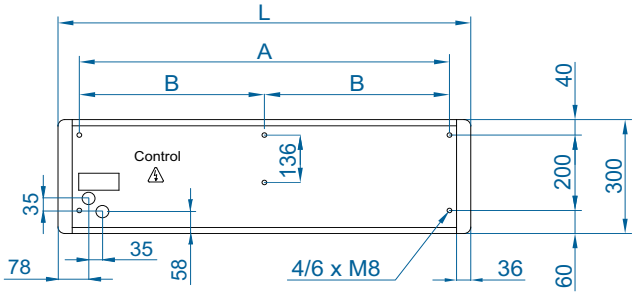

	L	A	B
OPT 1000	1050	940	-
OPT 1500	1550	1440	-
OPT 2000	2050	1940	970

Optional accessories

Supports and installation

Wall rail support
SPWR

Silentblock supports
SPANG-SIL / SLB

Suspension cables
SPCT

Central joint

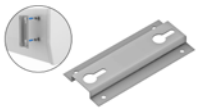
Omega wall support
SPT2

Control

ADVANCED PRO
✔ Included

IR Control
✔ Included

RJ11 Cable
✔ Included

CLEVER PRO

Sensors and valves

Magnetic door contact
DC-MAG
✔ Included

Mechanical door contact
DC-MEC

External Temperature
Sensor

Solenoid valve
V-S (ON/OFF)

Proportional valve
V-ACT

Valve 3 ways
V-T

Selection program

CAD drawings, BIM files, installation manuals and other documentation

CAD BIM

Technical Features

Standard: Cover RAL 9016

Other colors on request

Maximum range
2,8 m

Airflow / Length
1450 - 3200 m³/h
1 m to 2 m

Fan
Tangential
2-speed

Heating type
A : unheated
E : electrical 3 stages
P : water

Heating capacity
E : 1,9 - 11,3 kW
P : 8,3 - 17,5 kW

Control
Plug&Play Advanced PRO
+ IR remote control
(Optional Clever Pro Control)

Casing
Galvanised steel

Inlet grille
Suction lamellas
+ Rectangular perforated

Outlet lamellas
Aluminium, airfoil type

RECESSED OPTIMA air curtain for commercial building entrances with recommended height of installation up to 2,8 meters.
Inlet and outlet integrated in a single frame full view slatted grille for an easy installation. Stylish design, finished optionally in any colour to blend in with the building's internal or external aesthetics.
Advanced Plug&Play control. Includes: Advanced PRO control with LCD display and integrated thermostat, door contact, 7m RJ11 cable and remote control. Optional: intelligent Clever PRO Control (automatic, programmable, modbus for PLC, timer, etc).

UNHEATED

Model	Airflow	Ventilation power 230V~50Hz	Ventilation current 230V~50Hz	Noise level (5 m)	Weight
	m³/h	W	A	dB(A)	kg
RO 1000 A	1700	80	0,41	35/50	24
RO 1500 A	2200	117	0,53	36/51	34
RO 2000 A	3200	160	0,82	38/53	44,5

ELECTRIC HEATED

Model	Airflow	Electrical heating capacity (**)	Power supply	Ventilation power 230V~50Hz	Ventilation current 230V~50Hz	Noise level (5 m)	Weight
	m³/h	kW		W	A	dB (A)	kg
RO 1000 E	1700	1,9/3,8/5,6	400Vx3	80	0,41	35/50	26
RO 1000 E-9	1700	3/6/9	400Vx3	80	0,41	35/50	27
RO 1000 E230	1700	1,9/3,8/5,6	230Vx1	80	0,41	35/50	26
RO 1500 E	2200	3/6/9	400Vx3	117	0,53	36/51	37,5
RO 1500 E230-6	2200	1,9/3,8/5,6	230Vx1	117	0,53	36/51	37,5
RO 1500 E230-9	2200	3/6/9	230Vx1 (*)	117	0,53	36/51	37,5
RO 2000 E	3200	3,8/5,6/11,3	400Vx3	160	0,82	38/53	53,5
RO 2000 E230	3200	3,8/5,6/11,3	230Vx1 (*)	160	0,82	38/53	53,5

(*) 2 separated power supplies. (**) Under request other electrical heating power can be limited.

WATER HEATED

Model	Airflow	P86 (80/60ºC)		P64 (60/40ºC)		Ventilation power 230V~50Hz	Ventilation current 230V~50Hz	Noise level (5 m)	Weight
		Water heating capacity	Water pressure drop	Water heating capacity	Water pressure drop				
	m³/h	kW	Pa	kW	Pa	W	A	dB(A)	kg
RO 1000 P86	1450	8,3	7360	-	-	80	0,41	37/51	26,5
RO 1000 P64	1400	-	-	6,42	6570	80	0,41	37/51	26,5
RO 1500 P86	2175	13,0	7480	-	-	117	0,53	38/52	37,5
RO 1500 P64	2100	-	-	9,85	6210	117	0,53	38/52	37,5
RO 2000 P86	2850	17,1	6810	-	-	160	0,82	40/54	49
RO 2000 P64	2700	-	-	12,83	5560	160	0,82	40/54	49

Water heated: connection pipes 1/2" female. P86 of 2 rows coil. P64 of 3 rows coil. No model exceeds the 70dB of noise level.

Dimensions

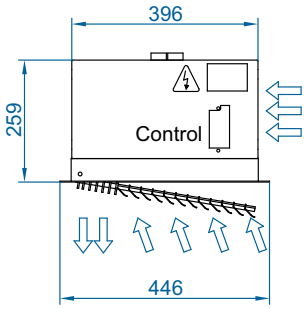

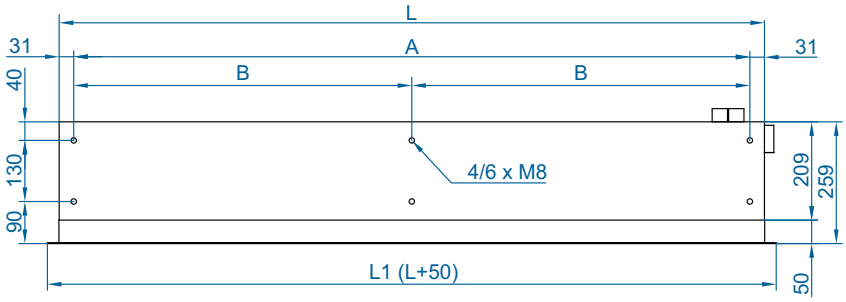

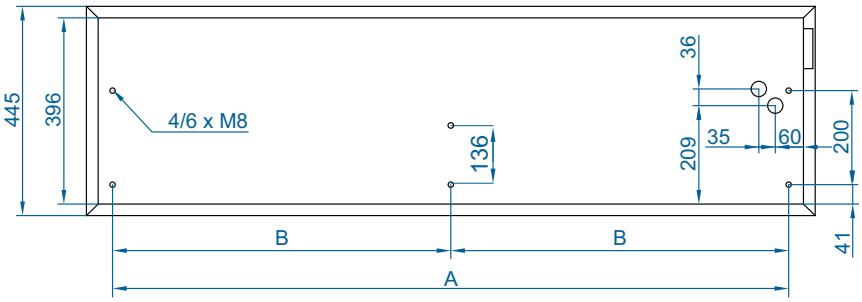

	L	L1	A	B
RO 1000	1000	1050	938	-
RO 1500	1500	1550	1438	-
RO 2000	2000	2050	1938	969

Optional accessories

Supports and installation

Wall rail support
SPWR

Silentblock supports
SPANG-SIL / SLB

Suspension cables
SPCT

Control

ADVANCED PRO
✔ Included

IR Control
✔ Included

RJ11 Cable
✔ Included

CLEVER PRO

Sensors and valves

Magnetic door contact
DC-MAG
✔ Included

Mechanical door contact
DC-MEC

External Temperature
Sensor

Solenoid valve
V-S (ON/OFF)

Proportional valve
V-ACT

Valve 3 ways
V-T

Selection program

CAD drawings, BIM files, installation manuals and other documentation

CAD BIM

Technical Features

Standard:
Cover RAL 9016
Casing RAL 9006

Other colours on request

Maximum range
3,5 m

Airflow / Length
1600 - 3800 m³/h
1 m to 2 m

Fan
Tangential
2-speed

Heating type
A : unheated
E : electrical 3 stages
P : water

Heating capacity
E : 3 - 18 kW
P : 6,9 -19,3 kW

Control
Plug&Play Advanced PRO
+ IR remote control
(Optional Clever Pro Control)

Casing
Galvanised steel

Inlet grille
Hexagonal perforated

Outlet lamellas
Aluminium, airfoil type

TOP is an innovative concept of a decorative recessed air curtain for fully visible installation. It is designed to be integrated into modern premises with contemporary architecture or industrial style. The decorative integral cover is available in different colours to blend in with the surrounding decoration. The front panel is ideal for customising with logos, lighting, lettering or signage, according to the customer's requirements.
It incorporates tangential fans with low noise twisted profile turbine 2-speed external rotor motor.
Advanced Plug&Play control. Includes: Advanced PRO control with LCD display and integrated thermostat, door contact, 7m RJ11 cable and remote control. Optional: intelligent Clever PRO Control (automatic, programmable, modbus for PLC, timer, etc).

UNHEATED

Model	Airflow	Ventilation power 230V~50Hz	Ventilation current 230V~50Hz	Noise level (5 m)	Weight
	m³/h	W	A	dB(A)	kg
TOP 1000 A	1900	123	0,59	35/53	23,5
TOP 1500 A	2800	207	0,96	37/55	36
TOP 2000 A	3800	253	1,18	39/57	44,5

ELECTRICAL HEATED

Model	Airflow	Electrical heating capacity (*)	Power supply	Ventilation power 230V~50Hz	Ventilation current 230V~50Hz	Noise level (5 m)	Weight
	m³/h	kW		W	A	dB(A)	kg
TOP 1000 E	1800	3/6/9	400Vx3	0,123	0,59	36/54	26.5
TOP 1500 E	2650	4/8/12	400Vx3	0,207	0,96	38/56	40,5
TOP 2000 E	3600	6/12/18	400Vx3	0,253	1,18	40/58	55,5

(*) Under request other electrical heating power can be limited.

WATER HEATED

Model	Airflow	P86 (80/60ºC)		P64 (60/40ºC)		Ventilation power 230V~50Hz	Ventilation current 230V~50Hz	Noise level (5 m)	Weight
		Water heating capacity	Water pressure drop	Water heating capacity	Water pressure drop				
	m³/h	kW	Pa	kW	Pa	W	A	dB(A)	kg
TOP 1000 P86	1750	9,28	7630	-	-	123	0,59	35/53	26
TOP 1000 P64	1600	-	-	6,99	7630	123	0,59	36/53	26
TOP 1500 P86	2400	13,65	7000	-	-	207	0,96	39/55	39,5
TOP 1500 P64	2200	-	-	10,16	6550	207	0,96	40/55	39,5
TOP 2000 P86	3500	19,26	7140	-	-	253	1,18	40/56	49
TOP 2000 P64	3200	-	-	14,31	6740	253	1,18	41/56	49

Water heated: connection pipes 1/2" female. P86 of 2 rows coil. P64 of 3 rows coil.
No model exceeds the 70dB of noise level.

Dimensions

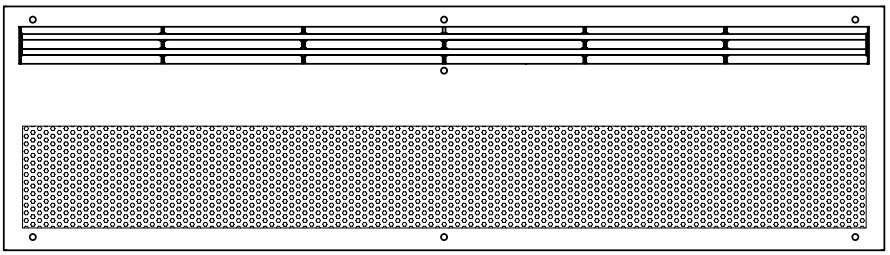

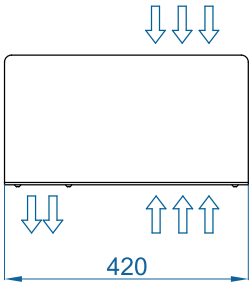

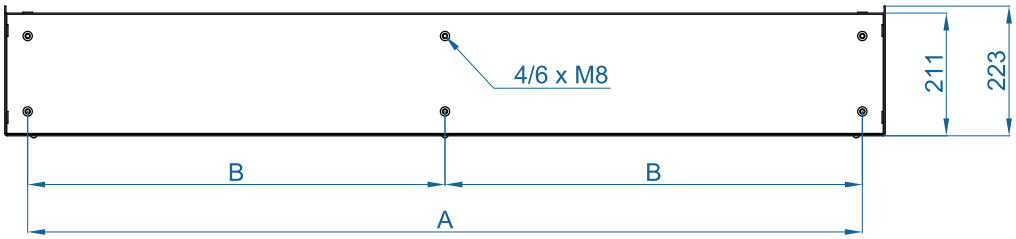

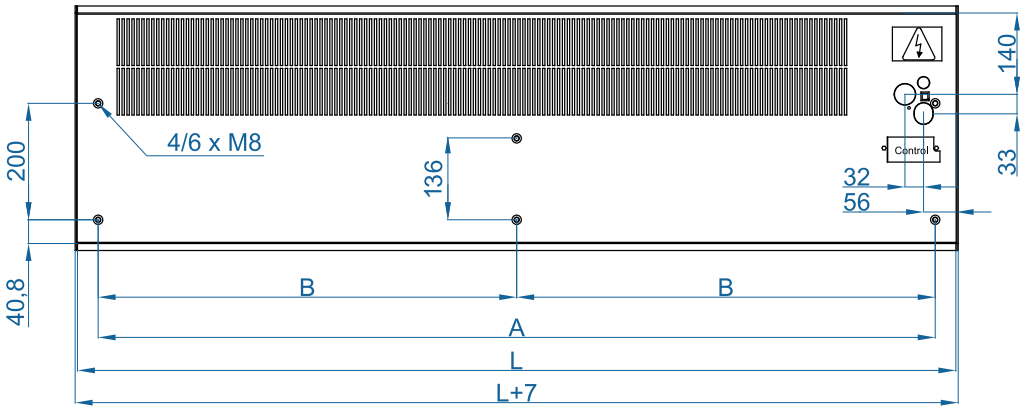

	L	A	B
TOP 1000	1010	938	-
TOP 1500	1510	1438	-
TOP 2000	2010	1938	969

Selection program

Planos CAD, archivos BIM, manuales de instalación y otra documentación

CAD BIM

Finishes

The front panel is designed to include graphics, logos, illuminated signs, signage, clocks or any other decorative element desired by the customer. It is also available in any colour from the RAL chart or in stainless steel.

The decorative integral cover is available in different colours, to blend in with the surrounding decoration.

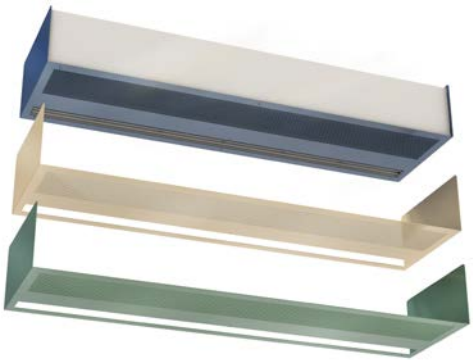

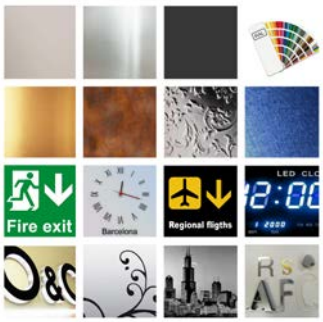

WATCH VIDEO

Optional accessories

Supports and installation

Wall rail support
SPWR

Silentblock supports
SPANG-SIL / SLB

Suspension cables
SPCT

Wall angle support
Top

Control

ADVANCED PRO
✔ Included

IR Control
✔ Included

RJ11 Cable
✔ Included

CLEVER PRO

Sensors and valves

Magnetic door contact
DC-MAG
✔ Included

Mechanical door contact
DC-MEC

External Temperature
Sensor

Solenoid valve
V-S (ON/OFF)

Proportional valve
V-ACT

Valve 3 ways
V-T

Technical Features

RAL 9016 standard

Other colors on request

Maximum range
3,5 m

Airflow / Length
1600 - 3800 m³/h
1 m to 2 m

Fan
Tangential
2-speed

Heating type
A : unheated
E : electrical 3 stages
P : water

Heating capacity
E : 3 - 18 kW
P : 7,27 - 19,34 kW

Control
Plug&Play Advanced PRO
+ IR remote control
(Optional Clever Pro Control)

Casing
Galvanised steel

Inlet grille
Rectangular perforated

Outlet lamellas
Aluminium, airfoil type

ARIS contemporary, discreet and elegant air curtain that features a smooth front panel with rounded edges and shapes, customizable with logos, lighting, signage or safety and informational signs. The inlet grille is hidden in the upper part, thus avoiding the internal vision of the air curtain. Also available in OPEN version, featuring a perforated front air intake that compensates for any restrictions in the top air intake, maintaining efficient airflow without compromising the unit's aesthetic appearance.

It incorporates tangential fans with low noise twisted profile turbine and 2-speed external rotor motor.
Advanced Plug&Play control. Includes: Advanced PRO control with LCD display and integrated thermostat, door contact, 7m RJ11 cable and remote control. Optional: intelligent Clever PRO Control (automatic, programmable, modbus for PLC, timer, etc).

UNHEATED

Model	Airflow	Ventilation power 230V~50Hz	Ventilation current 230V~50Hz	Noise level (5 m)	Weight
	m³/h	W	A	dB(A)	kg
ARIS 1000 A	1900	123	0,59	37/52	20,5
ARIS 1500 A	2800	207	0,96	38/53	32
ARIS 2000 A	3800	253	1,18	39/54	39

ELECTRIC HEATED

Model	Airflow	Electrical heating capacity (*)	Power supply	Ventilation power 230V~50Hz	Ventilation current 230V~50Hz	Noise level (5 m)	Weight
	m³/h	kW		W	A	dB(A)	kg
ARIS 1000 E	1800	3/6/9	400Vx3	131	0,59	37/52	24,5
ARIS 1500 E	2800	4/8/12	400Vx3	207	0,96	38/53	35
ARIS 2000 E	3600	6/12/18	400Vx3	253	1,18	39/54	50

(*) Under request other electrical heating power can be limited.

WATER HEATED

Model	Airflow	P86 (80/60ºC)		P64 (60/40ºC)		Ventilation power 230V~50Hz	Ventilation current 230V~50Hz	Noise level (5 m)	Weight
		Water heating capacity	Water pressure drop	Water heating capacity	Water pressure drop				
	m³/h	kW	Pa	kW	Pa	W	A	dB(A)	kg
ARIS 1000 P86	1750	9,28	7630	-	-	116	0,53	39/53	23,5
ARIS 1000 P64	1600	-	-	6,99	7630	107	0,48	39/53	23,5
ARIS 1500 P86	2625	14,44	7750	-	-	187	0,86	40/54	34
ARIS 1500 P64	2350	-	-	10,59	7050	172	0,83	40/54	34
ARIS 2000 P86	3500	19,26	7140	-	-	222	1,03	41/55	43,5
ARIS 2000 P64	3200	-	-	14,31	6740	206	0,98	41/55	43,5

Water heated: connection pipes 1/2" female. P86 of 2 rows coil. P64 of 3 rows coil.
No model exceeds the 70dB of noise level.

Dimensions

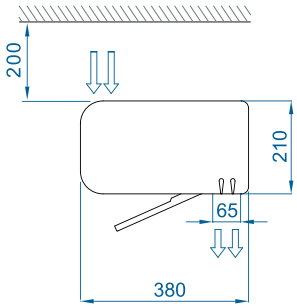

ARIS STANDARD

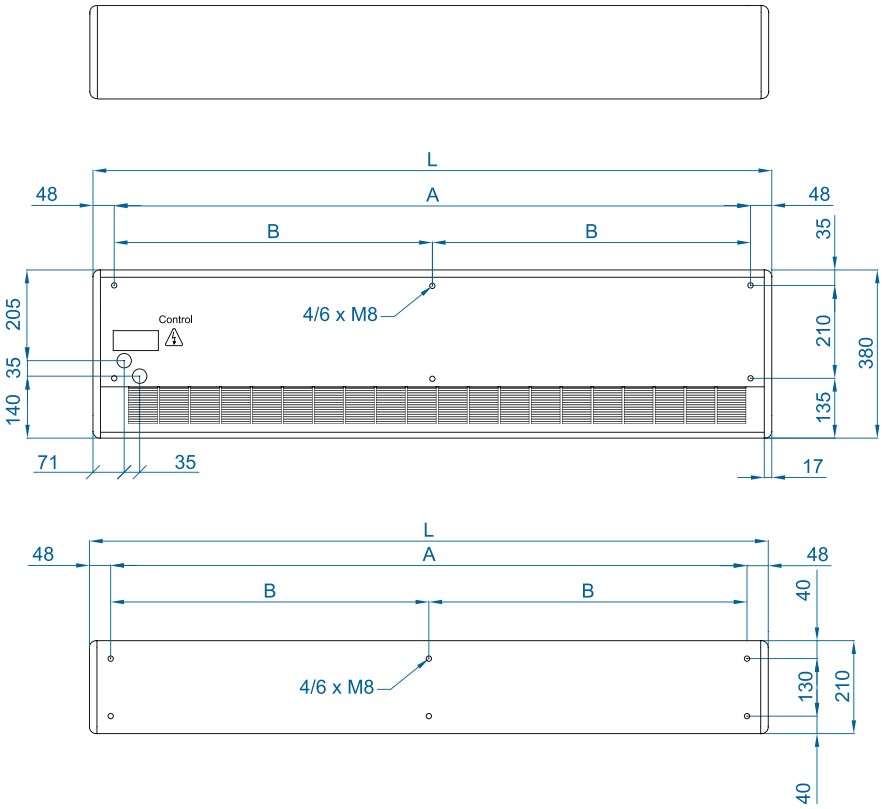

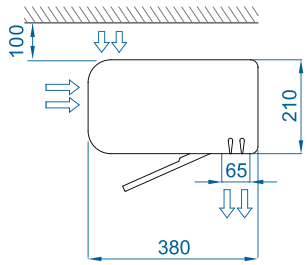

ARIS OPEN

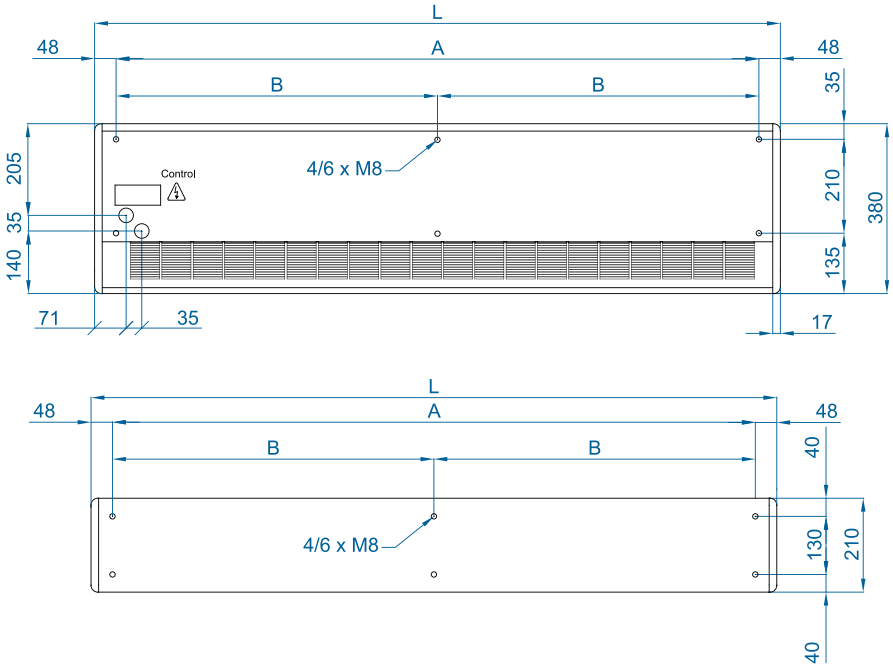

	L	A	B
ARIS 1000	1034	940	-
ARIS 1500	1534	1440	-
ARIS 2000	2034	1940	970

Finishes

STANDARD FRONT

Smooth or customizable front panel with logos, lighting or signage.

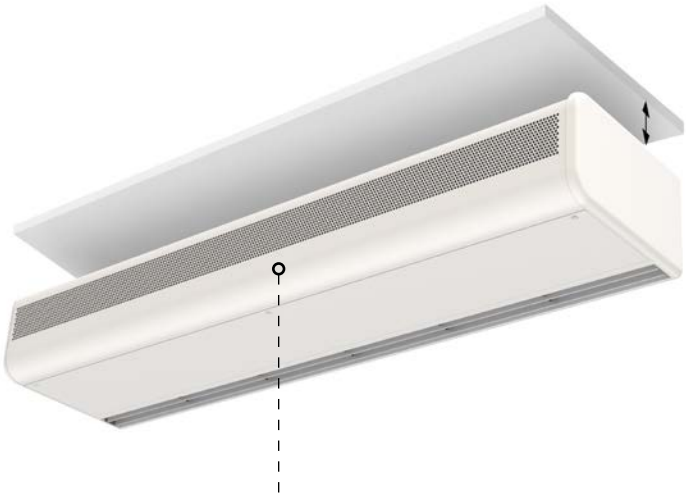

OPEN FRONT OPTION

To ensure optimal performance in installations with limited ceiling clearance, the "Open" option features a semi-perforated front air intake that compensates for any restrictions in the top air intake, maintaining efficient airflow without compromising the unit's aesthetic appearance.

Selection program

CAD drawings, BIM files, installation manuals and other documentation

CAD BIM

Optional accessories

Supports and installation

Wall rail support
SPWR

Silentblock supports
SPANG-SIL / SLB

Suspension cables
SPCT

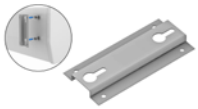

Omega wall support
SPT2

Control

ADVANCED PRO
✔ Included

IR Control
✔ Included

RJ11 Cable
✔ Included

CLEVER PRO

Sensors and valves

Magnetic door contact
DC-MAG
✔ Included

Mechanical door contact
DC-MEC

External Temperature Sensor

Solenoid valve
V-S (ON/OFF)

Proportional valve
V-ACT

Valve 3 ways
V-T

Technical Features

Standard: Cover RAL 9016

Other colors on request

Maximum range
3,5 m

Airflow / Length
1600 - 3800 m³/h
1 m to 2 m

Fan
Tangential
2-speed

Heating type
A : unheated
E : electrical 3 stages
P : water

Heating capacity
E : 3 - 18 kW
P : 6,9 - 19,3 kW

Control
Plug&Play Advanced PRO
+ IR remote control
(Optional Clever Pro Control)

Casing
Galvanised steel

Inlet grille
Suction lamellas
+ Rectangular perforated

Outlet lamellas
Aluminium, airfoil type

Low pressure RECESSED ARIS air curtain. Self-supporting casing construction made of galvanized steel plate, ready to be installed recessed in a false ceiling. It has both internal and external fixings. Electrical and electronic connections inside. Low noise twisted cross-flow fans driven by a 2-speed external rotor motor.
Advanced Plug&Play control. Includes: Advanced PRO control with LCD display and integrated thermostat, door contact, 7m RJ11 cable and remote control. Optional: intelligent Clever PRO Control (automatic, programmable, modbus for PLC, timer, etc).

UNHEATED

Model	Airflow	Ventilation power 230V~50Hz	Ventilation current 230V~50Hz	Noise level (5 m) (*)	Weight
	m³/h	W	A	dB(A)	kg
RA 1000 A	1900	123	0,59	37/52	24,5
RA 1500 A	2800	207	0,96	38/53	37
RA 2000 A	3800	253	1,18	39/54	45,5

(*) Sound Pressure conditions: Distance to the unit 5 metres. Directional factor: 2. Equivalent absorption area: 200 m²

ELECTRIC HEATED

Model	Airflow	Electrical heating capacity (**)	Power supply	Ventilation power 230V~50Hz	Ventilation current 230V~50Hz	Noise level (5 m) (***)	Weight
	m³/h	kW		W	A	dB (A)	kg
RA 1000 E	1800	3/6/9	400Vx3	123	0,59	37/52	27,5
RA 1500 E	2650	4/8/12	400Vx3	207	0,96	38/53	41,5
RA 2000 E	3600	6/12/18	400Vx3	253	1,18	39/54	56,5

(*) 2 separated power supplies. (**) Under request other electrical heating power can be limited.
(***) Sound Pressure conditions: Distance to the unit 5 metres. Directional factor: 2. Equivalent absorption area: 200 m²

WATER HEATED

Model	Airflow	P86 (80/60ºC) Water heating capacity	P86 (80/60ºC) Water pressure drop	P64 (60/40ºC) Water heating capacity	P64 (60/40ºC) Water pressure drop	Ventilation power 230V~50Hz	Ventilation current 230V~50Hz	Noise level (5 m) (*)	Weight
	m³/h	kW	Pa	kW	Pa	W	A	dB(A)	kg
RA 1000 P86	1750	9,3	7630	-	-	123	0,59	39/53	27
RA 1000 P64	1600	-	-	6,99	7630	123	0,59	39/53	27
RA 1500 P86	2400	13,6	7000	-	-	207	0,96	40/54	40,5
RA 1500 P64	2200	-	-	10,16	6550	207	0,96	40/54	40,5
RA 2000 P86	3500	19,3	7140	-	-	253	1,18	41/55	50
RA 2000 P64	3200	-	-	14,31	6740	253	1,18	41/55	50

Water heated: connection pipes 1/2" female. P86 of 2 rows coil. P64 of 3 rows coil. No model exceeds the 70dB of noise level.
(*) Sound Pressure conditions: Distance to the unit 5 metres. Directional factor: 2. Equivalent absorption area: 200 m²

Dimensions

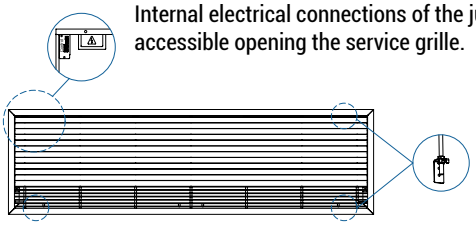

Internal electrical connections of the junction box and the internal PC, accessible opening the service grille.

4x M8 Internal brackets for holding the fastening rods, accessible opening the service grille.

Rear fixation - 4/6 x M8

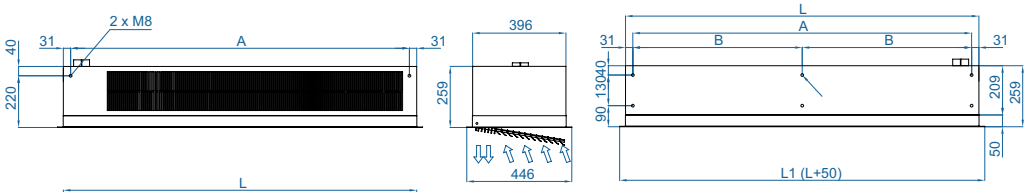

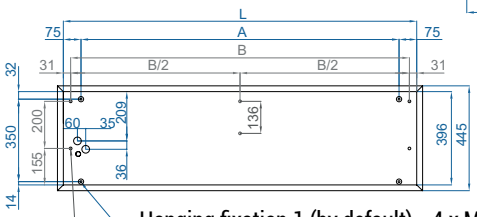

	L	L1	A	B	B/2
RA 1000	1000	1050	850	938	-
RA 1500	1500	1550	1350	1438	-
RA 2000	2000	2050	1850	1938	969

Hanging fixation 1 (by default) - 4 x M8 Through-holes for routing the fasteners to the interior.
Hanging fixation 2 (optional) - 4/6 x M8 Holes for external fastening.

Optional accessories

Supports and installation

Wall rail support
SPWR

Silentblock supports
SPANG-SIL / SLB

Suspension cables
SPCT

Control

ADVANCED PRO
✔ Included

IR Control
✔ Included

RJ11 Cable
✔ Included

CLEVER PRO

Sensors and valves

Magnetic door contact
DC-MAG
✔ Included

Mechanical door contact
DC-MEC

External Temperature
Sensor

Solenoid valve
V-S (ON/OFF)

Proportional valve
V-ACT

Valve 3 ways
V-T

Selection program

CAD drawings, BIM files, installation manuals and other documentation

CAD BIM

Technical Features

RAL 9016 standard

Other colors on request

Stainless steel

Maximum range
M : 3,5 m ECM : 3,8 m
G : 4 m ECG : 4,2 m

Airflow / Length
1660 - 7200 m³/h
1 m to 3 m

Fans
Centrifugal
5-speed

Heating types
E : electrical 3 stages
P : water
A : unheated
DX : heat pump [*]

Heating capacity
E : 3 - 30 kW
P : 8,5 - 40,3 kW

Control
Plug&Play Advanced PRO
+ IR remote control
(Optional Clever Control)

Casing [**]
Galvanised Steel

Grille type
Micro-perforated
with prefilter function

Outlet lamellas
Aluminium, airfoil type
Adjustable 0-15º each side

[*] Consult separate DX catalogs
[**] Customizable dimensions on request

WINDBOX air curtains range provide equipment suitable for all types of commercial entrances. A compact and robust air curtain from our standard range with a timeless design, ready for visible installation over the door and prepared for multiple false ceiling installation configurations.

This air curtain model works with double-inlet centrifugal fans driven by an external rotor motor with low noise level. EC models assembled with very low consumption efficiency fans.

Advanced Plug&Play control. Includes: Advanced PRO control with LCD display and integrated thermostat, door contact, 7m RJ11 cable and remote control. Optional: intelligent Clever PRO Control (automatic, programmable, modbus for PLC, timer, etc).

UNHEATED

Model	Airflow	Ventilation power 230V~50Hz	Ventilation current 230V~50Hz	Noise level (5 m)	Weight
	m³/h	kW	A	dB(A)	kg
M 1000 A	1800	0,212	0,94	55	31
M 1500 A	2700	0,318	1,41	56	46
M 2000 A	3600	0,424	1,88	57	58
M 2500 A	4500	0,530	2,35	58	72
M 3000 A	5400	0,636	2,82	59	86
ECM 1000 A	1840	0,142	1,24	56	31
ECM 1500 A	2760	0,213	1,86	57	46
ECM 2000 A	3680	0,284	2,48	58	58
ECM 2500 A	4600	0,355	3,10	59	72
ECM 3000 A	5520	0,426	3,72	60	86
G 1000 A	2400	0,642	2,85	57	43
G 1500 A	3200	0,856	3,80	58	51
G 2000 A	4800	1,284	5,70	59	80
G 2500 A	5600	1,498	6,65	60	84
G 3000 A	6400	1,712	7,60	61	95
ECG 1000 A	2700	0,213	1,86	61	43
ECG 1500 A	3600	0,284	2,48	62	51
ECG 2000 A	5400	0,426	3,72	63	80
ECG 2500 A	6300	0,497	4,34	64	84
ECG 3000 A	7200	0,568	4,96	65	95

ELECTRIC HEATED

Model	Airflow	Electrical heating capacity 400Vx3~50Hz (*)	Ventilation power 230V~50Hz	Ventilation current 230V~50Hz	Noise level (5 m)	Weight
	m³/h	kW	kW	A	dB(A)	kg
M 1000 E	1800	3/6/9	0,212	0,94	55	37
M 1500 E	2700	4/8/12	0,318	1,41	56	57
M 2000 E	3600	6/12/18	0,424	1,88	57	75
M 2500 E	4500	6/12/18	0,530	2,35	58	94
M 3000 E	5400	8/16/24	0,636	2,82	59	112
ECM 1000 E	1840	3/6/9	0,142	1,24	56	37
ECM 1500 E	2760	4/8/12	0,213	1,86	57	57
ECM 2000 E	3680	6/12/18	0,284	2,48	58	75
ECM 2500 E	4600	6/12/18	0,355	3,10	59	94
ECM 3000 E	5520	8/16/24	0,426	3,72	60	112
G 1000 E	2400	5/10/15	0,642	2,85	57	52
G 1500 E	3200	7,5/15/22,5	0,856	3,80	58	63
G 2000 E	4800	10/20/30	1,284	5,70	59	100
G 2500 E	5600	10/20/30	1,498	6,65	60	106
G 3000 E	6400	10/20/30	1,712	7,60	61	120
ECG 1000 E	2700	5/10/15	0,213	1,86	61	52
ECG 1500 E	3600	7,5/15/22,5	0,284	2,48	62	63
ECG 2000 E	5400	10/20/30	0,426	3,72	63	100
ECG 2500 E	6300	10/20/30	0,497	4,34	64	106
ECG 3000 E	7200	10/20/30	0,568	4,96	65	120

(*) Under request other electrical heating power can be limited.

WATER HEATED

Model	Airflow	P86 (80/60°C)		P64 (60/40°C)		P54 (50/40°C)		Ventilation power 230V~50Hz	Ventilation current 230V~50Hz	Noise level (5 m)	Weight
		Water heating capacity	Water pressure drop	Water heating capacity	Water pressure drop	Water heating capacity	Water pressure drop				
	m³/h	kW	Pa	kW	Pa	kW	Pa	kW	A	dB(A)	kg
M 1000 P	1660	9,17	880	8,56	4370	8,52	1220	0,428	1,90	56	35
M 1500 P	2490	14,26	760	13,69	6460	14,34	4480	0,642	2,85	57	53
M 2000 P	3320	20,65	1930	18,26	4790	18,65	2060	0,856	3,80	58	69
M 2500 P	4150	26,92	3810	22,12	3850	24,32	4040	1,070	4,75	59	86
M 3000 P	4980	33,24	6590	28,37	6760	29,77	5660	1,280	5,70	60	103
ECM 1000 P	1720	9,38	920	8,77	4560	8,74	1280	0,142	1,24	56	35
ECM 1500 P	2580	14,58	790	14,02	6730	14,71	4690	0,213	1,86	57	53
ECM 2000 P	3440	21,12	2010	18,70	4990	19,13	2150	0,284	2,48	58	69
ECM 2500 P	4300	27,53	3960	23,33	4010	24,95	4230	0,355	3,10	59	86
ECM 3000 P	5160	33,99	6860	29,05	7050	30,54	5920	0,426	3,72	60	103
G 1000 P	2250	11,04	1230	10,42	6190	10,56	1790	0,642	2,85	57	50
G 1500 P	3000	16,02	940	15,47	8020	16,37	5670	0,856	3,80	58	59
G 2000 P	4500	24,92	2700	22,29	6810	23,15	3030	1,284	5,70	59	92
G 2500 P	5250	31,16	4930	26,61	5060	28,76	5450	1,498	6,65	60	96
G 3000 P	6000	37,35	8110	32,10	8410	34,03	7180	1,712	7,60	61	109
ECG 1000 P	2550	11,89	1400	11,27	7110	11,50	2090	0,213	1,86	61	50
ECG 1500 P	3400	17,29	1070	16,77	9240	17,86	6620	0,284	2,48	62	59
ECG 2000 P	5100	26,86	3080	24,14	7850	25,24	3530	0,426	3,72	63	92
ECG 2500 P	5950	33,63	5650	28,84	5840	31,38	6360	0,497	4,34	64	96
ECG 3000 P	6800	40,34	9290	34,81	9710	37,16	8400	0,568	4,96	65	109

Water heated: connection pipes P86 and P64 are 2x3/4" female (male if lateral pipes), P54 2x1" male.
P86 2 rows coil, P64 3 rows coil, P54 4 rows coil.

Selection program

Dimensions

Horizontal installation

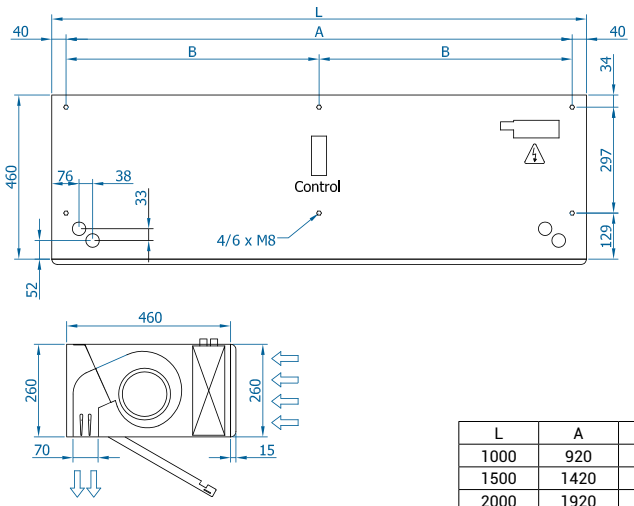

L	A	B
1000	920	-
1500	1420	710
2000	1920	960
2500	2420	1210
3000	2920	1460

Customizable dimensions on request.

Vertical installation

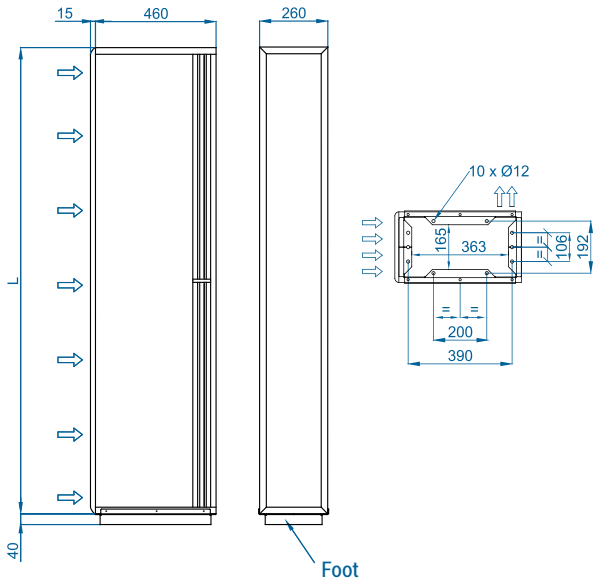

Inside ceiling surface mounting

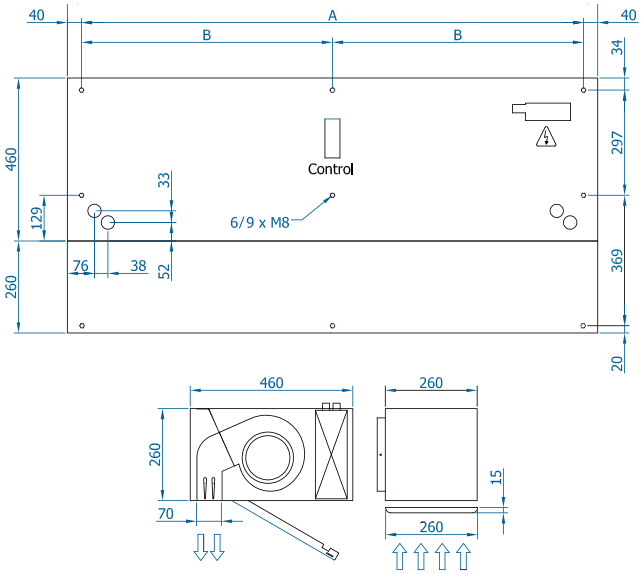

False ceiling invisible mounting

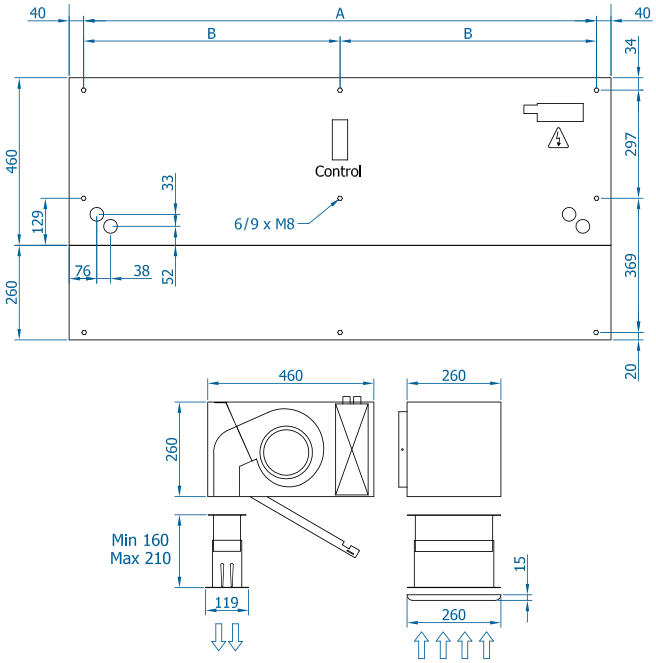

CAD drawings, BIM files, installation manuals and other documentation

CAD BIM

Installation Configurations

With inlet kit

With outlet kit

With inlet and outlet kit

With plenum

With plenum and kits

With top inlet plenum

Duowind / Duowind with inlet and outlet kits

With flat inlet and outlet kits

With plenum and recessed frame accessory

Optional accessories

Supports and installation

Wall rail supports SPWR

Silentblock supports SPANG-SIL / SLB

Suspension cables SPCT

Foot support SPF-WINDBOX MG (Galv. / SS)

Joining kit SPJ-MG (Galv. / SS)

False Ceiling Frame Kit

Flat inlet and outlet kits

Service tray between ID and OD

Double heater

Control

ADVANCED PRO
✔ Included

IR Control
✔ Included

RJ11 Cable
✔ Included

CLEVER PRO

Filters

Removable prefilter G2

Sensors and valves

Magnetic door contact MAG-DC
✔ Included

Mechanical door contact MEC-DC

External Temperature Sensor

Solenoid valve V-S

Valve 3 ways V-T

Proportional valve V-ACT

Condensation

Condensation tray

Technical Features

RAL 9016 standard

Other colors on request

Maximum range
M : 3,5 m ECM : 3,8 m
G : 4 m ECG : 4,2 m

Airflow / Length
1660 - 6300 m³/h
1 m to 2,5 m

Fans
Centrifugal
5-speed

Heating types
E : electrical 3 stages
P : water
A : unheated
DX : heat pump [*]

Heating capacity
E : 3 - 30 kW
P : 8,5 - 33,6 kW

Control
Plug&Play Advanced PRO
+ IR remote control
(Optional Clever Control)

Casing
Galvanised Steel

Grille type
Suction lamellas

Outlet lamellas
Aluminium, airfoil type
Adjustable 0-15º each side

[*] Consult separate DX catalogs

RECESSED WINDBOX is a high pressure compact and robust air curtain from our standard range with a timeless and visually pleasing design. It is specially designed for recessed installation in false ceilings. It is a suitable air curtain for all types of commercial entrances.
Inlet grille made with aluminium profiles and blow-out nozzle, integrated in a single white frame colour RAL 9016. Other colours are available on request.

This air curtain model works with double-inlet centrifugal fans driven by an external rotor motor with low noise level. EC models assembled with very low consumption efficiency fans.

Advanced Plug&Play control. Includes: Advanced PRO control with LCD display and integrated thermostat, door contact, 7m RJ11 cable and remote control. Optional: intelligent Clever PRO Control (automatic, programmable, modbus for PLC, timer, etc).

UNHEATED

Model	Airflow	Ventilation power 230V~50Hz	Ventilation current 230V~50Hz	Noise level (5 m)	Weight
	m³/h	kW	A	dB(A)	kg
RM 1000 A	1800	0,212	0,94	55	57
RM 1500 A	2700	0,318	1,41	56	85
RM 2000 A	3600	0,424	1,88	57	109
RM 2500 A	4500	0,530	2,35	58	137
RECM 1000 A	1840	0,142	1,24	56	57
RECM 1500 A	2760	0,213	1,86	57	85
RECM 2000 A	3680	0,284	2,48	58	109
RECM 2500 A	4600	0,355	3,10	59	137
RG 1000 A	2400	0,642	2,85	57	61
RG 1500 A	3200	0,856	3,80	58	90
RG 2000 A	4800	1,284	5,70	59	118
RG 2500 A	5600	1,498	6,65	60	145
RECG 1000 A	2700	0,213	1,86	61	61
RECG 1500 A	3600	0,284	2,48	62	90
RECG 2000 A	5400	0,426	3,72	63	118
RECG 2500 A	6300	0,497	4,34	64	145

ELECTRIC HEATED

Model	Airflow	Electrical heating capacity 400Vx3~50Hz (*)	Ventilation power 230V~50Hz	Ventilation current 230V~50Hz	Noise level (5 m)	Weight
	m³/h	kW	kW	A	dB(A)	kg
RM 1000 E	1800	3/6/9	0,212	0,94	55	65
RM 1500 E	2700	4/8/12	0,318	1,41	56	98
RM 2000 E	3600	6/12/18	0,424	1,88	57	130
RM 2500 E	4500	6/12/18	0,530	2,35	58	162
RECM 1000 E	1840	3/6/9	0,142	1,24	56	65
RECM 1500 E	2760	4/8/12	0,213	1,86	57	98
RECM 2000 E	3680	6/12/18	0,284	2,48	58	130
RECM 2500 E	4600	6/12/18	0,355	3,10	59	162
RG 1000 E	2400	5/10/15	0,642	2,85	57	70
RG 1500 E	3200	7,5/15/22,5	0,856	3,80	58	104
RG 2000 E	4800	10/20/30	1,284	5,70	59	140
RG 2500 E	5600	10/20/30	1,498	6,65	60	172
RECG 1000 E	2700	5/10/15	0,213	1,86	61	70
RECG 1500 E	3600	7,5/15/22,5	0,284	2,48	62	104
RECG 2000 E	5400	10/20/30	0,426	3,72	63	140
RECG 2500 E	6300	10/20/30	0,497	4,34	64	172

(*) Under request other electrical heating power can be limited.

WATER HEATED

Model	Airflow	P86 (80/60ºC)		P64 (60/40ºC)		P54 (50/40ºC)		Ventilation power 230V~50Hz	Ventilation current 230V~50Hz	Noise level (5 m)	Weight
		Water heating capacity	Water pressure drop	Water heating capacity	Water pressure drop	Water heating capacity	Water pressure drop				
	m³/h	kW	Pa	kW	Pa	kW	Pa	kW	A	dB(A)	kg
RM 1000 P	1660	9,17	880	8,56	4370	8,52	1220	0,428	1,90	56	63
RM 1500 P	2490	14,26	760	13,69	6460	14,34	4480	0,642	2,85	57	93
RM 2000 P	3320	20,65	1930	18,26	4790	18,65	2060	0,856	3,80	58	122
RM 2500 P	4150	26,92	3810	22,12	3850	24,32	4040	1,070	4,75	59	153
RECM 1000 P	1720	9,38	920	8,77	4560	8,74	1280	0,142	1,24	56	63
RECM 1500 P	2580	14,58	790	14,02	6730	14,71	4690	0,213	1,86	57	93
RECM 2000 P	3440	21,12	2010	18,70	4990	19,13	2150	0,284	2,48	58	122
RECM 2500 P	4300	27,53	3960	23,33	4010	24,95	4230	0,355	3,10	59	153
RG 1000 P	2250	11,04	1230	10,42	6190	10,56	1790	0,642	2,85	57	67
RG 1500 P	3000	16,02	940	15,47	8020	16,37	5670	0,856	3,80	58	98
RG 2000 P	4500	24,92	2700	22,29	6810	23,15	3030	1,284	5,70	59	131
RG 2500 P	5250	31,16	4930	26,61	5060	28,76	5450	1,498	6,65	60	163
RECG 1000 P	2550	11,89	1400	11,27	7110	11,50	2090	0,213	1,86	61	67
RECG 1500 P	3400	17,29	1070	16,77	9240	17,86	6620	0,284	2,48	62	98
RECG 2000 P	5100	26,86	3080	24,14	7850	25,24	3530	0,426	3,72	63	131
RECG 2500 P	5950	33,63	5650	28,84	5840	31,38	6360	0,497	4,34	64	163

Water heated: connection pipes P86 and P64 are 2x3/4" female (male if lateral pipes), P54 2x1" male.
P86 2 rows coil, P64 3 rows coil, P54 4 rows coil.

Selection program

Dimensions

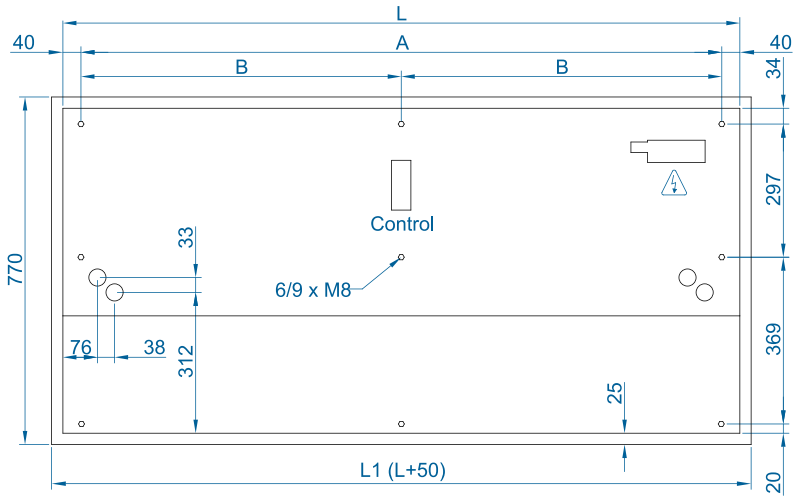

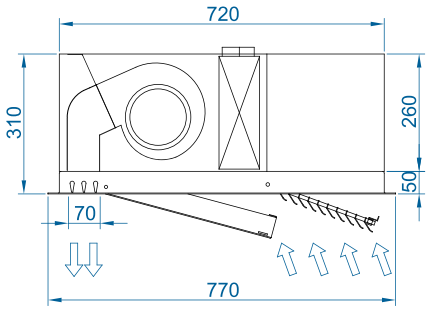

	L	L1	A	B
RWIN 1000	1000	1050	920	-
RWIN 1500	1500	1550	1420	710
RWIN 2000	2000	2050	1920	960
RWIN 2500	2500	2550	2420	1210

CAD drawings, BIM files, installation manuals and other documentation

CAD BIM

Optional accessories

Supports and installation

Wall rail support
SPWR

Silentblock supports
SPANG-SIL / SLB

Suspension cables
SPCT

Control

ADVANCED PRO
✔ Included

IR Control
✔ Included

RJ11 Cable
✔ Included

CLEVER PRO

Filters

Removable
prefilter G2

Sensors and valves

Magnetic
door contact MAG-DC
✔ Included

Mechanical
door contact MEC-DC

External Temperature
Sensor

Solenoid valve
V-S

Valve 3 ways
V-T

Proportional valve
V-ACT

Condensation

Condensation tray

Technical Features

RAL 9016 standard

Other colors on request

Stainless steel

Maximum range
M : 3,5 m ECM : 3,8 m
G : 4 m ECG : 4,2 m

Airflow / Length
1660 - 7200 m³/h
1 m to 3 m

Fans
Centrifugal
5-speed

Heating types
E : electrical 3 stages
P : water
A : unheated
DX : heat pump [*]

Heating capacity
E : 3 - 30 kW
P : 8,5 - 40,3 kW

Control
Plug&Play Advanced PRO
+ IR remote control
(Optional Clever Control)

Casing [**]
Galvanised Steel

Grille type
Circular perforated

Outlet lamellas
Aluminium, airfoil type
Adjustable 0-15º each side

[*] Consult separate DX catalogs
[**] Customizable dimensions on request

DAM is an air curtain from the standard range that stands out for its versatility and the design of its front part. The classic suction grille has been efficiently replaced by a front panel that can be customised with logos, signage, graphics or images providing a modern and clean view of the equipment. The double air inlet areas are located behind the front panel avoiding intensive maintenance.

This air curtain model works with double-inlet centrifugal fans driven by an external rotor motor with low noise level. EC models assembled with very low consumption efficiency fans.

Advanced Plug&Play control. Includes: Advanced PRO control with LCD display and integrated thermostat, door contact, 7m RJ11 cable and remote control. Optional: intelligent Clever PRO Control (automatic, programmable, modbus for PLC, timer, etc).

UNHEATED

Model	Airflow	Ventilation power 230V-50Hz	Ventilation current 230V-50Hz	Noise level (5 m)	Weight
	m³/h	kW	A	dB(A)	kg
DAM M 1000 A	1800	0,212	0,94	55	38
DAM M 1500 A	2700	0,318	1,41	56	56
DAM M 2000 A	3600	0,424	1,88	57	70
DAM M 2500 A	4500	0,530	2,35	58	76
DAM M 3000 A	5400	0,636	2,82	59	88
DAM ECM 1000 A	1840	0,142	1,24	56	38
DAM ECM 1500 A	2760	0,213	1,86	57	56
DAM ECM 2000 A	3680	0,284	2,48	58	70
DAM ECM 2500 A	4600	0,355	3,10	59	76
DAM ECM 3000 A	5520	0,426	3,72	60	88
DAM G 1000 A	2400	0,642	2,85	57	42
DAM G 1500 A	3200	0,856	3,80	58	61
DAM G 2000 A	4800	1,284	5,70	59	80
DAM G 2500 A	5600	1,498	6,65	60	86
DAM G 3000 A	6400	1,712	7,60	61	98
DAM ECG 1000 A	2700	0,213	1,86	61	42
DAM ECG 1500 A	3600	0,284	2,48	62	61
DAM ECG 2000 A	5400	0,426	3,72	63	80
DAM ECG 2500 A	6300	0,497	4,34	64	86
DAM ECG 3000 A	7200	0,568	4,96	65	98

ELECTRIC HEATED

Model	Airflow	Electrical heating capacity 400Vx3~50Hz (*)	Ventilation power 230V~50Hz	Ventilation current 230V~50Hz	Noise level (5 m)	Weight
	m³/h	kW	kW	A	dB(A)	kg
DAM M 1000 E	1800	3/6/9	0,212	0,94	55	45
DAM M 1500 E	2700	4/8/12	0,318	1,41	56	68
DAM M 2000 E	3600	6/12/18	0,424	1,88	57	88
DAM M 2500 E	4500	6/12/18	0,530	2,35	58	96
DAM M 3000 E	5400	8/16/24	0,636	2,82	59	111
DAM ECM 1000 E	1840	3/6/9	0,142	1,24	56	45
DAM ECM 1500 E	2760	4/8/12	0,213	1,86	57	68
DAM ECM 2000 E	3680	6/12/18	0,284	2,48	58	88
DAM ECM 2500 E	4600	6/12/18	0,355	3,10	59	96
DAM ECM 3000 E	5520	8/16/24	0,426	3,72	60	111
DAM G 1000 E	2400	5/10/15	0,642	2,85	57	50
DAM G 1500 E	3200	7,5/15/22,5	0,856	3,80	58	74
DAM G 2000 E	4800	10/20/30	1,284	5,70	59	98
DAM G 2500 E	5600	10/20/30	1,498	6,65	60	106
DAM G 3000 E	6400	10/20/30	1,712	7,60	61	121
DAM ECG 1000 E	2700	5/10/15	0,213	1,86	61	50
DAM ECG 1500 E	3600	7,5/15/22,5	0,284	2,48	62	74
DAM ECG 2000 E	5400	10/20/30	0,426	3,72	63	98
DAM ECG 2500 E	6300	10/20/30	0,497	4,34	64	106
DAM ECG 3000 E	7200	10/20/30	0,568	4,96	65	121

(*) Under request other electrical heating power can be limited.

WATER HEATED

Model	Airflow	P86 (80/60°C)		P64 (60/40°C)		P54 (50/40°C)		Ventilation power 230V~50Hz	Ventilation current 230V~50Hz	Noise level (5 m)	Weight
		Water heating capacity	Water pressure drop	Water heating capacity	Water pressure drop	Water heating capacity	Water pressure drop				
	m³/h	kW	Pa	kW	Pa	kW	Pa	kW	A	dB(A)	kg
DAM M 1000 P	1660	9,17	880	8,56	4370	8,52	1220	0,428	1,90	56	43
DAM M 1500 P	2490	14,26	760	13,69	6460	14,34	4480	0,642	2,85	57	64
DAM M 2000 P	3320	20,65	1930	18,26	4790	18,65	2060	0,856	3,80	58	81
DAM M 2500 P	4150	26,92	3810	22,12	3850	24,32	4040	1,070	4,75	59	89
DAM M 3000 P	4980	33,24	6590	28,37	6760	29,77	5660	1,280	5,70	60	103
DAM ECM 1000 P	1720	9,38	920	8,77	4560	8,74	1280	0,142	1,24	56	43
DAM ECM 1500 P	2580	14,58	790	14,02	6730	14,71	4690	0,213	1,86	57	64
DAM ECM 2000 P	3440	21,12	2010	18,70	4990	19,13	2150	0,284	2,48	58	81
DAM ECM 2500 P	4300	27,53	3960	23,33	4010	24,95	4230	0,355	3,10	59	89
DAM ECM 3000 P	5160	33,99	6860	29,05	7050	30,54	5920	0,426	3,72	60	103
DAM G 1000 P	2250	11,04	1230	10,42	6190	10,56	1790	0,642	2,85	57	48
DAM G 1500 P	3000	16,02	940	15,47	8020	16,37	5670	0,856	3,80	58	70
DAM G 2000 P	4500	24,92	2700	22,29	6810	23,15	3030	1,284	5,70	59	91
DAM G 2500 P	5250	31,16	4930	26,61	5060	28,76	5450	1,498	6,65	60	97
DAM G 3000 P	6000	37,35	8110	32,10	8410	34,03	7180	1,712	7,60	61	111
DAM ECG 1000 P	2550	11,89	1400	11,27	7110	11,50	2090	0,213	1,86	61	48
DAM ECG 1500 P	3400	17,29	1070	16,77	9240	17,86	6620	0,284	2,48	62	70
DAM ECG 2000 P	5100	26,86	3080	24,14	7850	25,24	3530	0,426	3,72	63	91
DAM ECG 2500 P	5950	33,63	5650	28,84	5840	31,38	6360	0,497	4,34	64	97
DAM ECG 3000 P	6800	40,34	9290	34,81	9710	37,16	8400	0,568	4,96	65	111

Water heated: connection pipes P86 and P64 are 2x3/4" female (male if lateral pipes), P54 2x1" male.
P86 2 rows coil, P64 3 rows coil, P54 4 rows coil.

Selection program

Dimensions

Horizontal installation

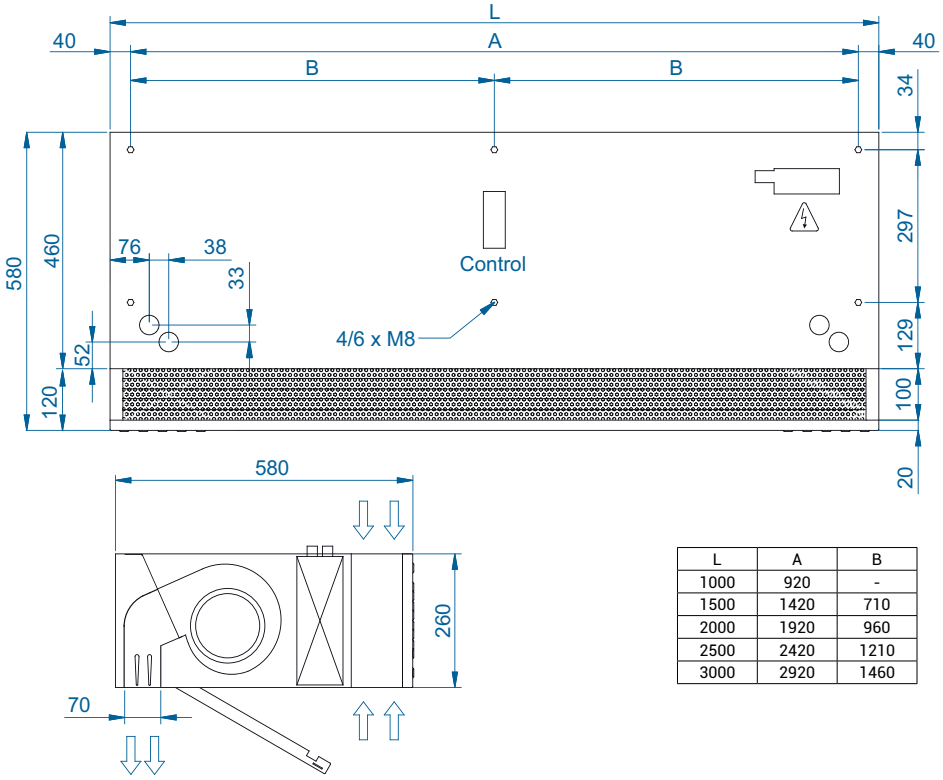

L	A	B
1000	920	-
1500	1420	710
2000	1920	960
2500	2420	1210
3000	2920	1460

Customizable dimensions on request.

Vertical installation

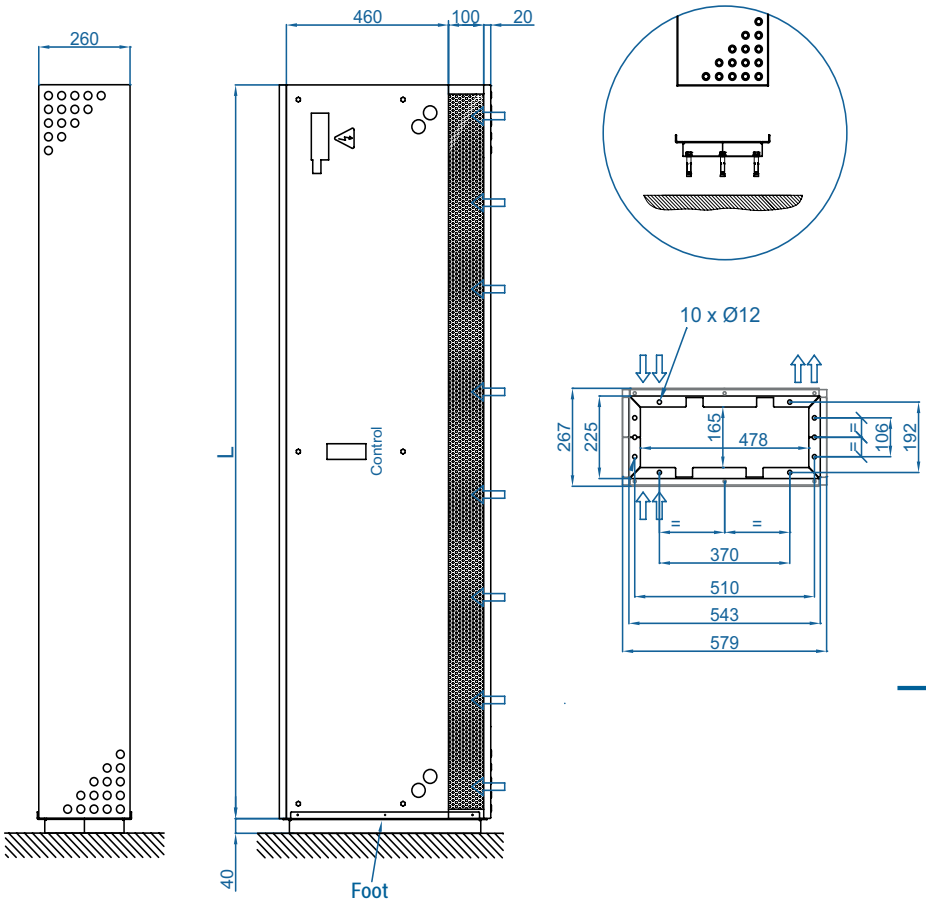

CAD drawings, BIM files, installation manuals and other documentation

CAD BIM

Dam Twin application

DAM TWIN system is an optimal solution for installations with very adverse conditions.

The system consists on two vertical DAM air curtains face to face, one with the air jet ahead and the other behind.

At the end of each jet there is the inlet of the other air curtain helping to close the air barrier. This double jet works as a closed circuit creating a separation zone at the door entrance.

WATCH VIDEO

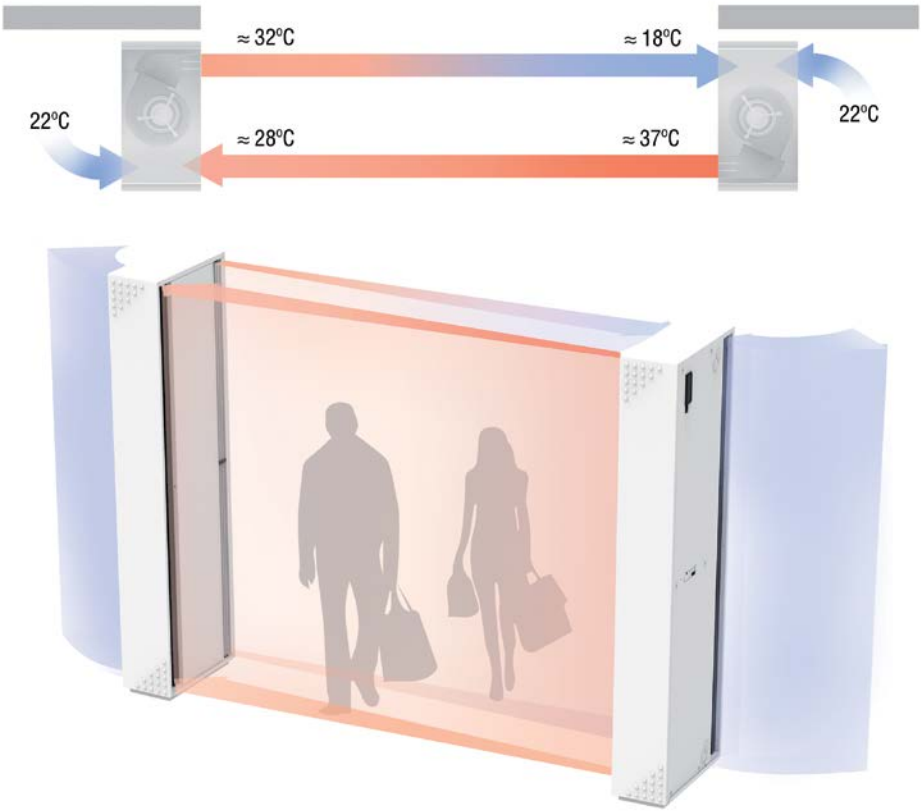

Optional accessories

Supports and installation

Wall rail supports SPWR

Silentblock supports SPANG-SIL / SLB

Suspension cables SPCT

Foot support SPF-DAM (Galv. / SS)

Joining kit SPJ-MG (Galv. / SS)

False Ceiling Frame Kit

Control

ADVANCED PRO
✔ Included

IR Control
✔ Included

RJ11 Cable
✔ Included

CLEVER PRO

Filters

Removable prefilter G2

Sensors and valves

Magnetic door contact MAG-DC
✔ Included

Mechanical door contact MEC-DC

External Temperature Sensor

Solenoid valve V-S

Valve 3 ways V-T

Proportional valve V-ACT

Condensation

Condensation tray

Technical Features

RAL 9016 standard

Other colors on request

Maximum range
M : 3,5 m ECM : 3,8 m
G : 4 m ECG : 4,2 m

Airflow / Length
1660 - 6300 m³/h
1 m to 2,5 m

Fans
Centrifugal
5-speed

Heating types
E : electrical 3 stages
P : water
A : unheated
DX : heat pump [*]

Heating capacity
E : 3 - 30 kW
P : 8,5 - 33,6 kW

Control
Plug&Play Advanced PRO
+ IR remote control
(Optional Clever Control)

Casing
Galvanised Steel

Grille type
Suction lamellas +
Rectangular perforated

Outlet lamellas
Aluminium

[*] Consult separate DX catalogs

RECESSED DAM is a high pressure compact and low profile air curtain from our standard range. It is specially designed for recessed installation in false ceilings, suitable for all types of commercial entrances. Its design is characterized by providing a full view of the inlet and outlet slatted grille, which is maintenance-free and is completely integrated into a single frame colour RAL 9016. Other colours are available on request.

This air curtain model works with double-inlet centrifugal fans driven by an external rotor motor with low noise level. EC models assembled with very low consumption efficiency fans.

Advanced Plug&Play control. Includes: Advanced PRO control with LCD display and integrated thermostat, door contact, 7m RJ11 cable and remote control. Optional: intelligent Clever PRO Control (automatic, programmable, modbus for PLC, timer, etc).

UNHEATED

Model	Airflow	Ventilation power 230V~50Hz	Ventilation current 230V~50Hz	Noise level (5 m)	Weight
	m³/h	kW	A	dB(A)	kg
RDAM M 1000 A	1800	0,212	0,94	55	45
RDAM M 1500 A	2700	0,318	1,41	56	66
RDAM M 2000 A	3600	0,424	1,88	57	84
RDAM M 2500 A	4500	0,530	2,35	58	93
RDAM ECM 1000 A	1840	0,142	1,24	56	45
RDAM ECM 1500 A	2760	0,213	1,86	57	66
RDAM ECM 2000 A	3680	0,284	2,48	58	84
RDAM ECM 2500 A	4600	0,355	3,10	59	93
RDAM G 1000 A	2400	0,642	2,85	57	49
RDAM G 1500 A	3200	0,856	3,80	58	71
RDAM G 2000 A	4800	1,284	5,70	59	94
RDAM G 2500 A	5600	1,498	6,65	60	103
RDAM ECG 1000 A	2700	0,213	1,86	61	49
RDAM ECG 1500 A	3600	0,284	2,48	62	71
RDAM ECG 2000 A	5400	0,426	3,72	63	94
RDAM ECG 2500 A	6300	0,497	4,34	64	103

ELECTRIC HEATED

Model	Airflow	Electrical heating capacity 400Vx3~50Hz (*)	Ventilation power 230V~50Hz	Ventilation current 230V~50Hz	Noise level (5 m)	Weight
	m³/h	kW	kW	A	dB(A)	kg
RDAM M 1000 E	1800	3/6/9	0,212	0,94	55	52
RDAM M 1500 E	2700	4/8/12	0,318	1,41	56	78
RDAM M 2000 E	3600	6/12/18	0,424	1,88	57	102
RDAM M 2500 E	4500	6/12/18	0,530	2,35	58	113
RDAM ECM 1000 E	1840	3/6/9	0,142	1,24	56	52
RDAM ECM 1500 E	2760	4/8/12	0,213	1,86	57	78
RDAM ECM 2000 E	3680	6/12/18	0,284	2,48	58	102
RDAM ECM 2500 E	4600	6/12/18	0,355	3,10	59	113
RDAM G 1000 E	2400	5/10/15	0,642	2,85	57	57
RDAM G 1500 E	3200	7,5/15/22,5	0,856	3,80	58	84
RDAM G 2000 E	4800	10/20/30	1,284	5,70	59	112
RDAM G 2500 E	5600	10/20/30	1,498	6,65	60	123
RDAM ECG 1000 E	2700	5/10/15	0,213	1,86	61	57
RDAM ECG 1500 E	3600	7,5/15/22,5	0,284	2,48	62	84
RDAM ECG 2000 E	5400	10/20/30	0,426	3,72	63	112
RDAM ECG 2500 E	6300	10/20/30	0,497	4,34	64	123

(*) Under request other electrical heating power can be limited.

WATER HEATED

Model	Airflow	P86 (80/60°C)		P64 (60/40°C)		P54 (50/40°C)		Ventilation power 230V~50Hz	Ventilation current 230V~50Hz	Noise level (5 m)	Weight
		Water heating capacity	Water pressure drop	Water heating capacity	Water pressure drop	Water heating capacity	Water pressure drop				
	m³/h	kW	Pa	kW	Pa	kW	Pa	kW	A	dB(A)	kg
RDAM M 1000 P	1660	9,17	880	8,56	4370	8,52	1220	0,428	1,90	56	50
RDAM M 1500 P	2490	14,26	760	13,69	6460	14,34	4480	0,642	2,85	57	74
RDAM M 2000 P	3320	20,65	1930	18,26	4790	18,65	2060	0,856	3,80	58	95
RDAM M 2500 P	4150	26,92	3810	22,12	3850	24,32	4040	1,070	4,75	59	106
RDAM ECM 1000 P	1720	9,38	920	8,77	4560	8,74	1280	0,142	1,24	56	50
RDAM ECM 1500 P	2580	14,58	790	14,02	6730	14,71	4690	0,213	1,86	57	74
RDAM ECM 2000 P	3440	21,12	2010	18,70	4990	19,13	2150	0,284	2,48	58	95
RDAM ECM 2500 P	4300	27,53	3960	23,33	4010	24,95	4230	0,355	3,10	59	106
RDAM G 1000 P	2250	11,04	1230	10,42	6190	10,56	1790	0,642	2,85	57	55
RDAM G 1500 P	3000	16,02	940	15,47	8020	16,37	5670	0,856	3,80	58	80
RDAM G 2000 P	4500	24,92	2700	22,29	6810	23,15	3030	1,284	5,70	59	105
RDAM G 2500 P	5250	31,16	4930	26,61	5060	28,76	5450	1,498	6,65	60	114
RDAM ECG 1000 P	2550	11,89	1400	11,27	7110	11,50	2090	0,213	1,86	61	55
RDAM ECG 1500 P	3400	17,29	1070	16,77	9240	17,86	6620	0,284	2,48	62	80
RDAM ECG 2000 P	5100	26,86	3080	24,14	7850	25,24	3530	0,426	3,72	63	105
RDAM ECG 2500 P	5950	33,63	5650	28,84	5840	31,38	6360	0,497	4,34	64	114

Water heated: connection pipes P86 and P64 are 2x3/4" female (male if lateral pipes), P54 2x1" male.
P86 2 rows coil, P64 3 rows coil, P54 4 rows coil.

Selection program

Dimensions

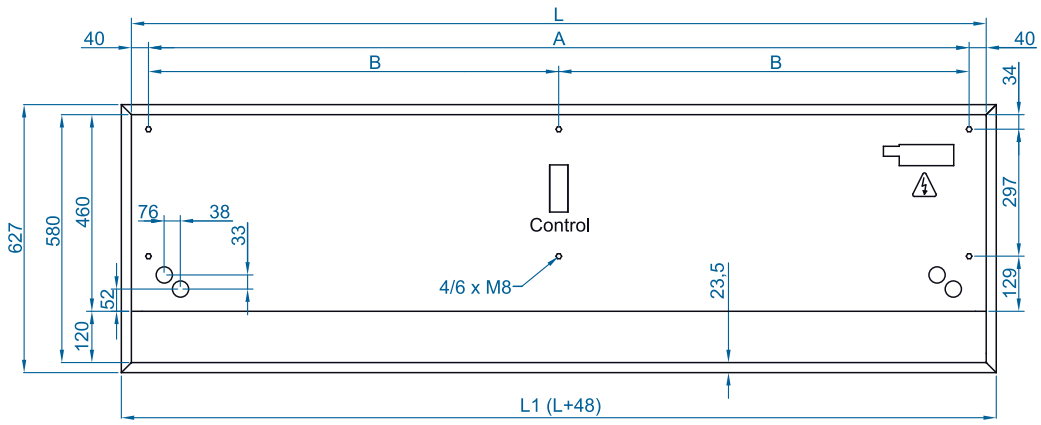

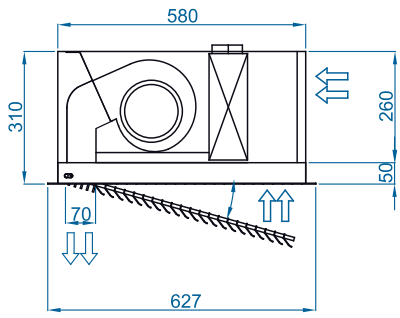

	L	L1	A	B
RDAM 1000	1000	1050	920	-
RDAM 1500	1500	1550	1420	710
RDAM 2000	2000	2050	1920	960
RDAM 2500	2500	2550	2420	1210

Optional accessories

CAD drawings, BIM files, installation manuals and other documentation

CAD BIM

Supports and installation

Wall rail support
SPWR

Silentblock supports
SPANG-SIL / SLB

Suspension cables
SPCT

Control

ADVANCED PRO
✔ Included

IR Control
✔ Included

RJ11 Cable
✔ Included

CLEVER PRO

Filters

Removable
prefilter G2

Sensors and valves

Magnetic
door contact MAG-DC
✔ Included

Mechanical
door contact MEC-DC

External Temperature
Sensor

Solenoid valve
V-S

Valve 3 ways
V-T

Proportional valve
V-ACT

Condensation

Condensation tray

Technical Features

RAL 9016 standard

Other colors on request

Stainless steel

Maximum range
M : 3,5 m
G : 4 m ECG : 4,2 m

Airflow / Length
1860 - 7200 m³/h
1 m to 3 m

Fans
Centrifugal
5-speed

Heating types
E : electrical 3 stages
P : water
A : unheated
DX : heat pump [*]

Heating capacity
E : 3 - 30 kW
P : 9,2 - 40,3 kW

Control
Plug&Play Advanced PRO
+ IR remote control
(Optional Clever Control)

Casing [**]
Galvanised Steel

Grille type
Rectangular perforated

Outlet lamellas
Aluminium, airfoil type
Adjustable 0-15º each side

[*] Consult separate DX catalogs
[**] Customizable dimensions on request

INVISAIR air curtain is designed to be installed invisibly in false ceilings and columns or drawers around the door. It is an ideal solution for those entrances that for architectural reasons require an air curtain installation that is fully integrated into the interior design of the building.
It can be vertically or horizontally mounted.
The air flow of Invisair follows a straight line from the air inlet grille to the to the discharge. Inlet area inside a bulkhead or column should be designed with suitable grille provided by others.

This air curtain model works with double-inlet centrifugal fans driven by an external rotor motor with low noise level. EC models assembled with very low consumption efficiency fans.

Advanced Plug&Play control. Includes: Advanced PRO control with LCD display and integrated thermostat, door contact, 7m RJ11 cable and remote control. Optional: intelligent Clever PRO Control (automatic, programmable, modbus for PLC, timer, etc).

UNHEATED

Model	Airflow	Ventilation power 230V~50Hz	Ventilation current 230V~50Hz	Noise level (5 m)	Weight
	m³/h	kW	A	dB(A)	kg
IM 1000 A	1980	0,318	1,41	55	48
IM 1500 A	2640	0,424	1,88	56	55
IM 2000 A	3960	0,636	2,82	57	68
IM 2500 A	4620	0,742	3,29	58	73
IM 3000 A	5280	0,848	3,76	59	84
IG 1000 A	2400	0,642	2,85	57	53
IG 1500 A	3200	0,856	3,80	58	60
IG 2000 A	4800	1,284	5,70	59	78
IG 2500 A	5600	1,498	6,65	60	83
IG 3000 A	6400	1,712	7,60	61	94
IECG 1000 A	2700	0,213	1,86	61	53
IECG 1500 A	3600	0,284	2,48	62	60
IECG 2000 A	5400	0,426	3,72	63	78
IECG 2500 A	6300	0,497	4,34	64	83
IECG 3000 A	7200	0,568	4,96	65	94

ELECTRIC HEATED

Model	Airflow	Electrical heating capacity 400Vx3~50Hz (*)	Ventilation power 230V~50Hz	Ventilation current 230V~50Hz	Noise level (5 m)	Weight
	m³/h	kW	kW	A	dB(A)	kg
IM 1000 E	1980	3/6/9	0,318	1,41	55	58
IM 1500 E	2640	4/8/12	0,424	1,88	56	67
IM 2000 E	3960	6/12/18	0,636	2,82	57	86
IM 2500 E	4620	6/12/18	0,742	3,29	58	93
IM 3000 E	5280	8/16/24	0,848	3,76	59	108
IG 1000 E	2400	5/10/15	0,642	2,85	57	64
IG 1500 E	3200	7,5/15/22,5	0,856	3,80	58	73
IG 2000 E	4800	10/20/30	1,284	5,70	59	96
IG 2500 E	5600	10/20/30	1,498	6,65	60	103
IG 3000 E	6400	10/20/30	1,712	7,60	61	118
IECG 1000 E	2700	5/10/15	0,213	1,86	61	64
IECG 1500 E	3600	7,5/15/22,5	0,284	2,48	62	73
IECG 2000 E	5400	10/20/30	0,426	3,72	63	96
IECG 2500 E	6300	10/20/30	0,497	4,34	64	103
IECG 3000 E	7200	10/20/30	0,568	4,96	65	118

(*) Under request other electrical heating power can be limited.

WATER HEATED

Model	Airflow	P86 (80/60ºC)		P64 (60/40ºC)		P54 (50/40ºC)		Ventilation power 230V~50Hz	Ventilation current 230V~50Hz	Noise level (5 m)	Weight
		Water heating capacity	Water pressure drop	Water heating capacity	Water pressure drop	Water heating capacity	Water pressure drop				
	m³/h	kW	Pa	kW	Pa	kW	Pa	kW	A	dB(A)	kg
IM 1000 P	1860	9,84	1000	9,22	4990	-	-	0,318	1,41	55	55
IM 1500 P	2480	14,23	760	13,65	6430	-	-	0,424	1,88	56	63
IM 2000 P	3720	22,17	2190	19,70	5470	-	-	0,636	2,82	57	78
IM 2500 P	4340	27,69	4000	23,48	4060	-	-	0,742	3,29	58	86
IM 3000 P	4960	33,15	6560	28,29	6730	-	-	0,848	3,76	59	100
IG 1000 P	2250	11,04	1230	10,42	6190	10,56	1790	0,642	2,85	57	60
IG 1500 P	3000	16,02	940	15,47	8020	16,37	5670	0,856	3,80	58	68
IG 2000 P	4500	24,92	2700	22,29	6810	23,15	3030	1,284	5,70	59	89
IG 2500 P	5250	31,16	4930	26,61	5060	28,76	5450	1,498	6,65	60	94
IG 3000 P	6000	37,35	8110	32,10	8410	34,03	7180	1,712	7,60	61	108
IECG 1000 P	2550	11,89	1400	11,27	7110	11,50	2090	0,213	1,86	54	61
IECG 1500 P	3400	17,29	1070	16,77	9240	17,86	6620	0,284	2,48	62	69
IECG 2000 P	5100	26,86	3080	24,14	7850	25,24	3530	0,426	3,72	63	89
IECG 2500 P	5950	33,63	5650	28,84	5840	31,38	6360	0,497	4,34	64	94
IECG 3000 P	6800	40,34	9290	34,81	9710	37,16	8400	0,568	4,96	65	108

Water heated: connection pipes P86 and P64 are 2x3/4" female (male if lateral pipes), P54 2x1" male.
P86 2 rows coil, P64 3 rows coil, P54 4 rows coil.

Selection program

Dimensions

Horizontal installation

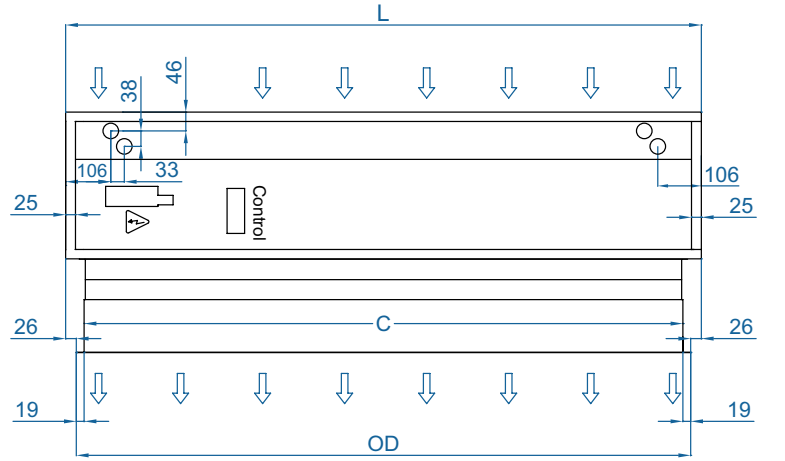

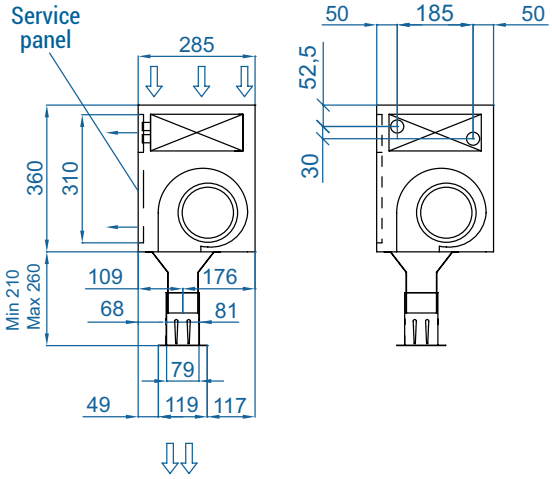

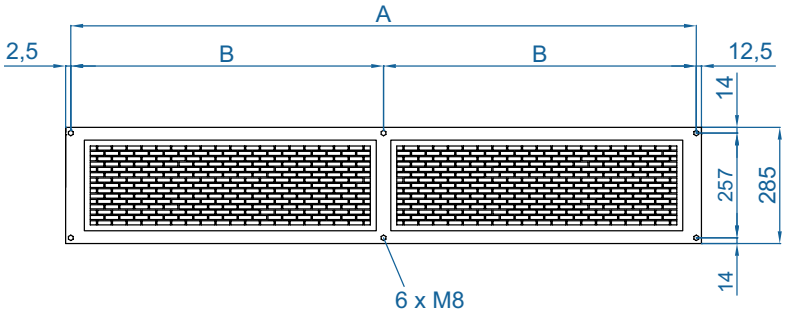

Invisair	L	A	B	C	OD
1000	1050	1025	.	961	998
1500	1550	1525	762,5	1461	1498
2000	2055	2030	1015	1961	1998
2500	2555	2530	1265	2461	2498
3000	3000	2975	1487,5	2961	2998

Customizable dimensions on request

Vertical installation

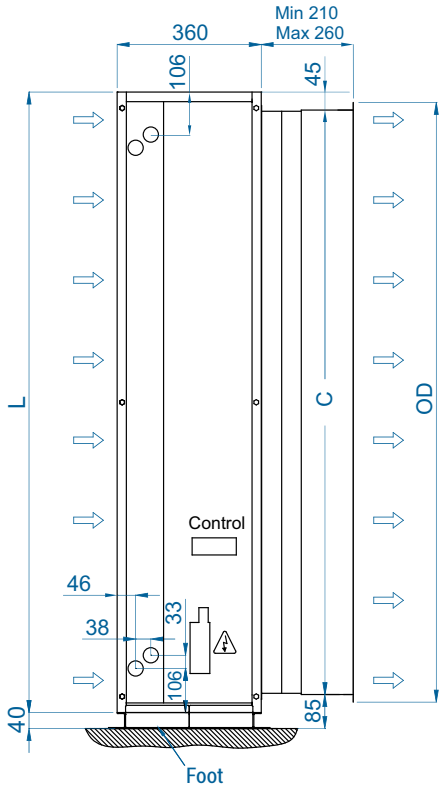

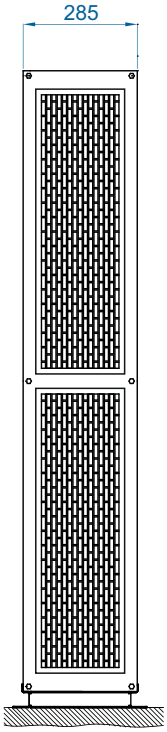

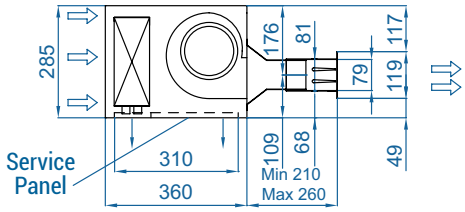

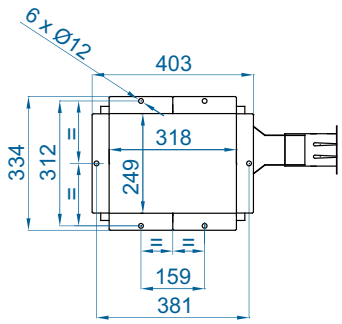

CAD drawings, BIM files, installation manuals and other documentation

CAD BIM

Installation configurations

Optional accessories

Supports and installation

Wall rail supports SPWR

Silentblock supports SPANG-SIL / SLB

Suspension cables SPCT

Wall angle support Invisair MG

Flat inlet grille

Foot support SPF-INVISAIR (Galv.)

Joining kit SPJ-INVISAIR (Galv.)

Control

ADVANCED PRO
✔ Included

IR Control
✔ Included

RJ11 Cable
✔ Included

CLEVER PRO

Filters

Removable prefilter G2

Sensors and valves

Magnetic door contact MAG-DC
✔ Included

Mechanical door contact MEC-DC

External Temperature Sensor

Solenoid valve V-S

Valve 3 ways V-T

Proportional valve V-ACT

Condensation

Condensation tray

Technical Features

RAL 9016 standard

Other colors on request

Maximum range
M : 3,5 m ECM : 3,8 m
G : 4 m ECG : 4,2 m

Airflow / Length
1660 - 7200 m³/h
1 m to 3 m

Fans
Centrifugal
5-speed

Heating types
E : electrical 3 stages
P : water
A : unheated
DX : heat pump [*]

Heating capacity
E : 3 - 30 kW
P : 8,5 - 40,3 kW

Control
Plug&Play Advanced PRO
+ IR remote control
(Optional Clever Control)

Casing [**]
Galvanised Steel

Grille type
Slotted perforated

Outlet lamellas
Aluminium, airfoil type
Adjustable 0-15º each side

[*] Consult separate DX catalogs
[**] Customizable dimensions on request

SMART air curtain combines the best technological features with high quality design and finishes. Contemporary, discreet and elegant, it is provided with smooth frontal panel as the air entrance is hidden and placed at the upper side, out of sight, thus avoiding interior vision of the air curtain and the grille. SMART is halfway between the standard and the decorative range, and it is of great value for commercial and public spaces that need to ensure an efficient and sustainable climatization, without bursting into the interior architecture and design of the premises.

SMART works with double-inlet centrifugal fans driven by an external rotor motor with low noise level. EC models assembled with very low consumption efficiency fans.

Advanced Plug&Play control. Includes: Advanced PRO control with LCD display and integrated thermostat, door contact, 7m RJ11 cable and remote control. Optional: intelligent Clever PRO Control (automatic, programmable, modbus for PLC, timer, etc).

UNHEATED

Model	Airflow	Ventilation power 230V~50Hz	Ventilation current 230V~50Hz	Noise level (5 m)	Weight
	m³/h	kW	A	dB(A)	kg
SMART M 1000 A	1800	0,212	0,94	53	34
SMART M 1500 A	2700	0,318	1,41	54	50
SMART M 2000 A	3600	0,424	1,88	55	62
SMART M 2500 A	4500	0,530	2,35	56	66
SMART M 3000 A	5400	0,636	2,82	57	76
SMART ECM 1000 A	1840	0,142	1,24	54	34
SMART ECM 1500 A	2760	0,213	1,86	55	50
SMART ECM 2000 A	3680	0,284	2,48	56	62
SMART ECM 2500 A	4600	0,355	3,10	57	66
SMART ECM 3000 A	5520	0,426	3,72	58	76
SMART G 1000 A	2400	0,642	2,85	55	38
SMART G 1500 A	3200	0,856	3,80	56	55
SMART G 2000 A	4800	1,284	5,70	57	72
SMART G 2500 A	5600	1,498	6,65	58	76
SMART G 3000 A	6400	1,712	7,60	59	86
SMART ECG 1000 A	2700	0,213	1,86	59	38
SMART ECG 1500 A	3600	0,284	2,48	60	55
SMART ECG 2000 A	5400	0,426	3,72	61	72
SMART ECG 2500 A	6300	0,497	4,34	62	76
SMART ECG 3000 A	7200	0,568	4,96	63	86

ELECTRIC HEATED

Model	Airflow	Electrical heating capacity 400Vx3~50Hz (*)	Ventilation power 230V~50Hz	Ventilation current 230V~50Hz	Noise level (5 m)	Weight
	m³/h	kW	kW	A	dB(A)	kg
SMART M 1000 E	1800	3/6/9	0,212	0,94	53	41
SMART M 1500 E	2700	4/8/12	0,318	1,41	54	62
SMART M 2000 E	3600	6/12/18	0,424	1,88	55	80
SMART M 2500 E	4500	6/12/18	0,530	2,35	56	86
SMART M 3000 E	5400	8/16/24	0,636	2,82	57	99
SMART ECM 1000 E	1840	3/6/9	0,142	1,24	54	41
SMART ECM 1500 E	2760	4/8/12	0,213	1,86	55	62
SMART ECM 2000 E	3680	6/12/18	0,284	2,48	56	80
SMART ECM 2500 E	4600	6/12/18	0,355	3,10	57	86
SMART ECM 3000 E	5520	8/16/24	0,426	3,72	58	99
SMART G 1000 E	2400	5/10/15	0,642	2,85	55	46
SMART G 1500 E	3200	7,5/15/22,5	0,856	3,80	56	68
SMART G 2000 E	4800	10/20/30	1,284	5,70	57	90
SMART G 2500 E	5600	10/20/30	1,498	6,65	58	96
SMART G 3000 E	6400	10/20/30	1,712	7,60	59	109
SMART ECG 1000 E	2700	5/10/15	0,213	1,86	59	46
SMART ECG 1500 E	3600	7,5/15/22,5	0,284	2,48	60	68
SMART ECG 2000 E	5400	10/20/30	0,426	3,72	61	90
SMART ECG 2500 E	6300	10/20/30	0,497	4,34	62	96
SMART ECG 3000 E	7200	10/20/30	0,568	4,96	63	109

(*) Under request other electrical heating power can be limited.

WATER HEATED

Model	Airflow	P86 (80/60°C)		P64 (60/40°C)		P54 (50/40°C)		Ventilation power 230V~50Hz	Ventilation current 230V~50Hz	Noise level (5 m)	Weight
		Water heating capacity	Water pressure drop	Water heating capacity	Water pressure drop	Water heating capacity	Water pressure drop				
	m³/h	kW	Pa	kW	Pa	kW	Pa	kW	A	dB(A)	kg
SMART M 1000 P	1660	9,17	880	8,56	4370	8,52	1220	0,428	1,90	54	39
SMART M 1500 P	2490	14,26	760	13,69	6460	14,34	4480	0,642	2,85	55	58
SMART M 2000 P	3320	20,65	1930	18,26	4790	18,65	2060	0,856	3,80	56	73
SMART M 2500 P	4150	26,92	3810	22,12	3850	24,32	4040	1,070	4,75	57	79
SMART M 3000 P	4980	33,24	6590	28,37	6760	29,77	5660	1,280	5,70	58	91
SMART ECM 1000 P	1720	9,38	920	8,77	4560	8,74	1280	0,142	1,24	54	39
SMART ECM 1500 P	2580	14,58	790	14,02	6730	14,71	4690	0,213	1,86	55	58
SMART ECM 2000 P	3440	21,12	2010	18,70	4990	19,13	2150	0,284	2,48	56	73
SMART ECM 2500 P	4300	27,53	3960	23,33	4010	24,95	4230	0,355	3,10	57	79
SMART ECM 3000 P	5160	33,99	6860	29,05	7050	30,54	5920	0,426	3,72	58	91
SMART G 1000 P	2250	11,04	1230	10,42	6190	10,56	1790	0,642	2,85	55	44
SMART G 1500 P	3000	16,02	940	15,47	8020	16,37	5670	0,856	3,80	56	64
SMART G 2000 P	4500	24,92	2700	22,29	6810	23,15	3030	1,284	5,70	57	83
SMART G 2500 P	5250	31,16	4930	26,61	5060	28,76	5450	1,498	6,65	58	87
SMART G 3000 P	6000	37,35	8110	32,10	8410	34,03	7180	1,712	7,60	59	99
SMART ECG 1000 P	2550	11,89	1400	11,27	7110	11,50	2090	0,213	1,86	59	44
SMART ECG 1500 P	3400	17,29	1070	16,77	9240	17,86	6620	0,284	2,48	60	64
SMART ECG 2000 P	5100	26,86	3080	24,14	7850	25,24	3530	0,426	3,72	61	83
SMART ECG 2500 P	5950	33,63	5650	28,84	5840	31,38	6360	0,497	4,34	62	87
SMART ECG 3000 P	6800	40,34	9290	34,81	9710	37,16	8400	0,568	4,96	63	99

Water heated: connection pipes P86 and P64 are 2x3/4" female (male if lateral pipes), P54 2x1" male.
P86 2 rows coil, P64 3 rows coil, P54 4 rows coil.

Selection program

Dimensions

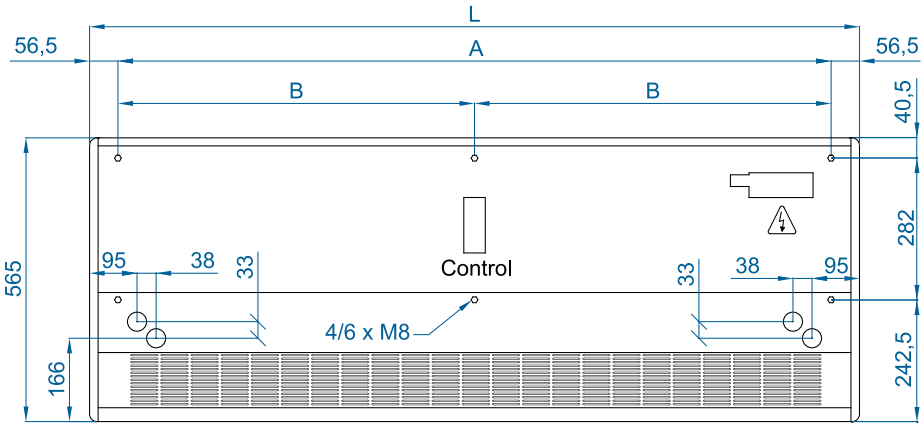

	L	A	B
SMART 1000	1034	920	-
SMART 1500	1534	1420	710
SMART 2000	2034	1920	960
SMART 2500	2534	2420	1210
SMART 3000	3034	2920	1460

Customizable dimensions on request.

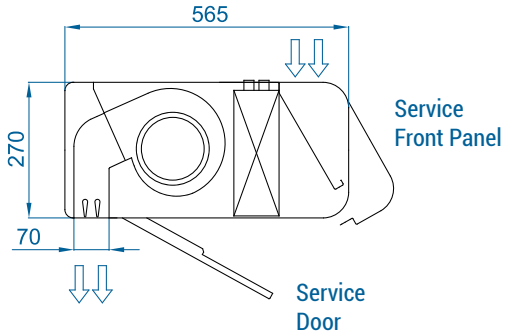

Smooth or customizable front panel
with logos, lighting or signage

Optional accessories

CAD drawings, BIM files, installation manuals and other documentation

CAD BIM

Supports and installation

Wall rail supports
SPWR

Silentblock supports
SPANG-SIL / SLB

Suspension cables
SPCT

Control

ADVANCED PRO
✔ Included

IR Control
✔ Included

RJ11 Cable
✔ Included

CLEVER PRO

Filters

Removable
prefilter G2

Sensors and valves

Magnetic
door contact MAG-DC
✔ Included

Mechanical
door contact MEC-DC

External Temperature
Sensor

Solenoid valve
V-S

Valve 3 ways
V-T

Proportional valve
V-ACT

Condensation

Condensation tray

Technical Features

Casing: Black forge (standard)

Panels: Anodized aluminium (standard)

Panels: Stainless Steel (optional)

Other colors and materials on request

Maximum range
M : 3,5 m
G : 4 m ECG : 4,2 m

Airflow / Length
1860 - 7200 m³/h
1 m to 3 m

Fans
Centrifugal
5-speed

Heating types
E : electrical 3 stages
P : water
A : unheated
DX : heat pump [*]

Heating capacity
E : 3 - 30 kW
P : 9,2 - 40,3 kW

Control
Plug&Play Advanced PRO
+ IR remote control
(Optional Clever Control)

Casing [**]
Galvanised Steel

Grille type
Rectangular perforated

Outlet lamellas
Aluminium, airfoil type
Adjustable 0-15º each side

[*] Consult separate DX catalogs
[**] Customizable dimensions on request

Decorative, minimalist and elegant, ZEN air curtain is it the favorite for architects and designers to include in their projects. Its smart design and high performance is perfect to blend with any building's internal or external aesthetics. Apart from seamlessly integrating into any space, ZEN can become an active part of the decor and ambience of the premises offering more features than a standard air curtain.

ZEN air curtain offers infinite possibilities of customization. Central casing made of galvanized steel finished in black forge as standard. Front anodized aluminium panels, optionally manufactured in brushed or mirror polished stainless steel. Other materials are possible, such as wood, metal, etc.
Other colours are available on request. Special finishes with other materials such as aged metal, wood, glass, PVC / PES, logos, signage, graphics, lights, clocks, vinyl or slogans.

This air curtain model works with double-inlet centrifugal fans driven by an external rotor motor with low noise level. EC models assembled with very low consumption efficiency fans.

Advanced Plug&Play control. Includes: Advanced PRO control with LCD display and integrated thermostat, door contact, 7m RJ11 cable and remote control. Optional: intelligent Clever PRO Control (automatic, programmable, modbus for PLC, timer, etc).

UNHEATED

Model	Airflow	Ventilation power 230V~50Hz	Ventilation current 230V~50Hz	Noise level (5 m)	Weight
	m³/h	kW	A	dB(A)	kg
ZEN M 1000 A	1980	0,318	1,41	55	32
ZEN M 1500 A	2640	0,424	1,88	56	46
ZEN M 2000 A	3960	0,636	2,82	57	62
ZEN M 2500 A	4620	0,742	3,29	58	75
ZEN M 3000 A	5280	0,848	3,76	59	99
ZEN G 1000 A	2400	0,642	2,85	57	36
ZEN G 1500 A	3200	0,856	3,80	58	50
ZEN G 2000 A	4800	1,284	5,70	59	69
ZEN G 2500 A	5600	1,498	6,65	60	83
ZEN G 3000 A	6400	1,712	7,60	61	108
ZEN ECG 1000 A	2700	0,213	1,86	61	36
ZEN ECG 1500 A	3600	0,284	2,48	62	50
ZEN ECG 2000 A	5400	0,426	3,72	63	69
ZEN ECG 2500 A	6300	0,497	4,34	64	83
ZEN ECG 3000 A	7200	0,568	4,96	65	108

ELECTRIC HEATED

Model	Airflow	Electrical heating capacity 400Vx3~50Hz (*)	Ventilation power 230V~50Hz	Ventilation current 230V~50Hz	Noise level (5 m)	Weight
	m³/h	kW	kW	A	dB(A)	kg
ZEN M 1000 E	1980	3/6/9	0,318	1,41	55	40
ZEN M 1500 E	2640	4/8/12	0,424	1,88	56	58
ZEN M 2000 E	3960	6/12/18	0,636	2,82	57	77
ZEN M 2500 E	4620	6/12/18	0,742	3,29	58	94
ZEN M 3000 E	5280	6/12/18	0,848	3,76	59	119
ZEN G 1000 E	2400	5/10/15	0,642	2,85	57	43
ZEN G 1500 E	3200	7,5/15/22,5	0,856	3,80	58	62
ZEN G 2000 E	4800	10/20/30	1,284	5,70	59	85
ZEN G 2500 E	5600	10/20/30	1,498	6,65	60	103
ZEN G 3000 E	6400	10/20/30	1,712	7,60	61	128
ZEN ECG 1000 E	2700	5/10/15	0,213	1,86	61	43
ZEN ECG 1500 E	3600	7,5/15/22,5	0,284	2,48	62	62
ZEN ECG 2000 E	5400	10/20/30	0,426	3,72	63	85
ZEN ECG 2500 E	6300	10/20/30	0,497	4,34	64	103
ZEN ECG 3000 E	7200	10/20/30	0,568	4,96	65	128

(*) Under request other electrical heating power can be limited.

WATER HEATED

Model	Airflow	P86 (80/60°C)		P64 (60/40°C)		P54 (50/40°C)		Ventilation power 230V~50Hz	Ventilation current 230V~50Hz	Noise level (5 m)	Weight
		Water heating capacity	Water pressure drop	Water heating capacity	Water pressure drop	Water heating capacity	Water pressure drop				
	m³/h	kW	Pa	kW	Pa	kW	Pa	kW	A	dB(A)	kg
ZEN M 1000 P	1860	9,84	1000	9,22	4990	-	-	0,318	1,41	55	37
ZEN M 1500 P	2480	14,23	760	13,65	6430	-	-	0,424	1,88	56	53
ZEN M 2000 P	3720	22,17	2190	19,70	5470	-	-	0,636	2,82	57	71
ZEN M 2500 P	4340	27,69	4000	23,48	4060	-	-	0,742	3,29	58	86
ZEN M 3000 P	4960	27,69	4000	23,48	4060	-	-	0,848	3,76	59	112
ZEN G 1000 P	2250	11,04	1230	10,42	6190	10,56	1790	0,642	2,85	57	40
ZEN G 1500 P	3000	16,02	940	15,47	8020	16,37	5670	0,856	3,80	58	57
ZEN G 2000 P	4500	24,92	2700	22,29	6810	23,15	3030	1,284	5,70	59	78
ZEN G 2500 P	5250	31,16	4930	26,61	5060	28,76	5450	1,498	6,65	60	95
ZEN G 3000 P	6000	31,16	4930	26,61	5060	28,76	5450	1,712	7,60	61	119
ZEN ECG 1000 P	2550	11,89	1400	11,27	7110	11,50	2090	0,213	1,86	61	40
ZEN ECG 1500 P	3400	17,29	1070	16,77	9240	17,86	6620	0,284	2,48	62	57
ZEN ECG 2000 P	5100	26,86	3080	24,14	7850	25,24	3530	0,426	3,72	63	78
ZEN ECG 2500 P	5950	33,63	5650	28,84	5840	31,38	6360	0,497	4,34	64	95
ZEN ECG 3000 P	6800	33,63	5650	28,84	5840	31,38	6360	0,568	4,96	65	119

Water heated: connection pipes P86 and P64 are 2x3/4" female (male if lateral pipes), P54 2x1" male.
P86 2 rows coil, P64 3 rows coil, P54 4 rows coil.

Selection program

Dimensions

Horizontal installation

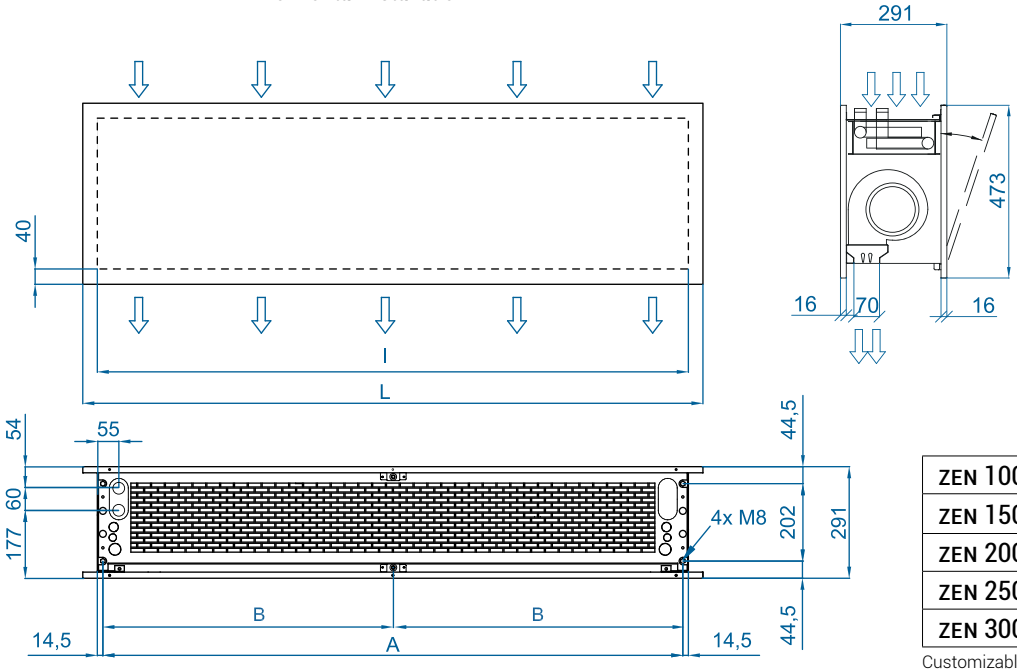

	L	I	A	B
ZEN 1000	1220	1140	1115	-
ZEN 1500	1620	1544	1515	-
ZEN 2000	2120	2044	2015	-
ZEN 2500	2620	2544	2515	-
ZEN 3000	2960	2884	2855	1427,5

Customizable dimensions on request.

Vertical installation

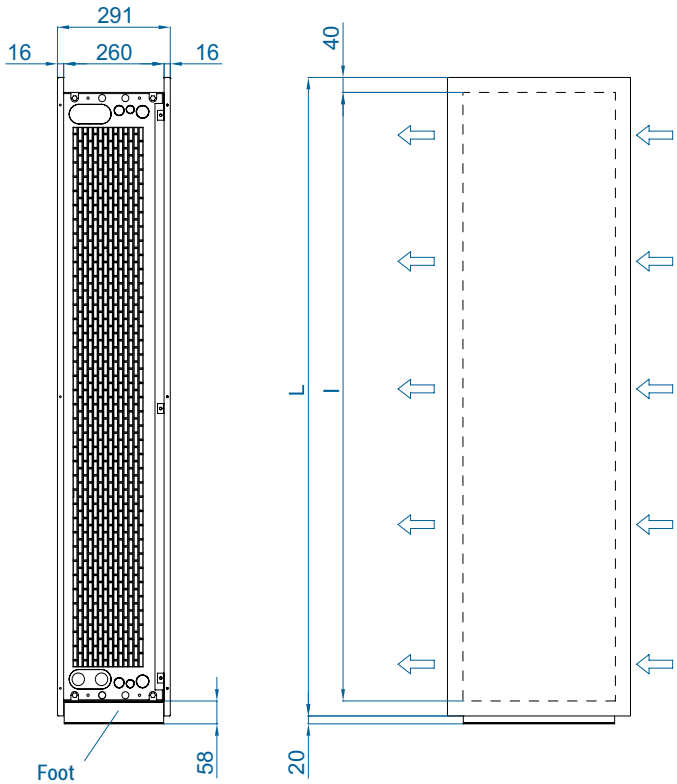

Floor Fixing Points

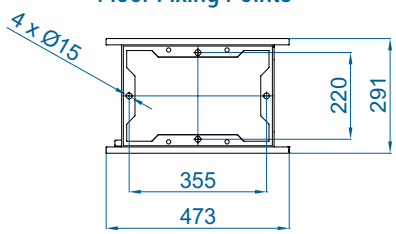

Space available for connections

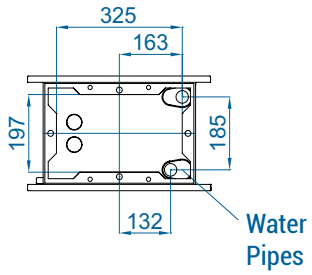

CAD drawings, BIM files, installation manuals and other documentation

CAD BIM

Finishes

The front panel is designed to include graphics, logos, illuminated signs, signage, clocks or any other decorative element desired by the customer. Available in any colour from the RAL chart or in stainless steel.

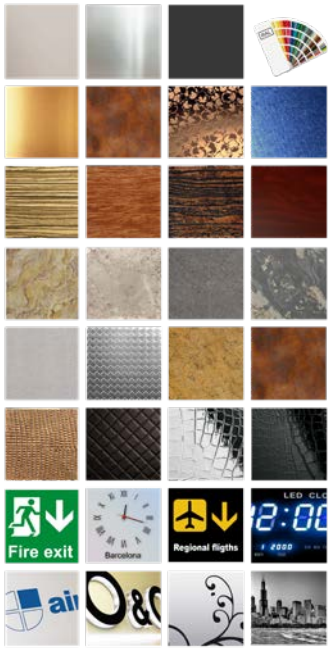

standard / painted

decorative metals

wood

stone

industrial

leather

signage

logos / images

WATCH VIDEO

SEE FINISHES CATALOGUE

Optional accessories

Supports and installation

Wall rail supports SPWR

Silentblock supports SPANG-SIL / SLB

Suspension cables SPCT

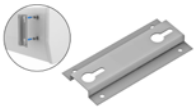

Omega wall support SPT4

Wall angle support Zen MG

Kit junction SPJ-ZEN middle and top

Support Zen arm

Foot support SPF-ZEN (Galv. / SS)

Control

ADVANCED PRO
✔ Included

IR Control
✔ Included

RJ11 Cable
✔ Included

CLEVER PRO

Filters

Removable prefilter G2

Sensors and valves

Magnetic door contact MAG-DC
✔ Included

Mechanical door contact MEG-DC

External Temperature Sensor

Solenoid valve V-S

Valve 3 ways V-T

Proportional valve V-ACT

Technical Features

Faceted / Smooth | Standard RAL 9006 / 9016 | SS Brushed / Polished | Other colors and materials on request

Maximum range
M : 3,5 m
G : 4 m ECG : 4,2 m

Airflow / Length
1860 - 7200 m³/h
1 m to 3 m

Fans
Centrifugal
5-speed

Heating types
E : electrical 3 stages
P : water
A : unheated
DX : heat pump [*]

Heating capacity
E : 3 - 30 kW
P : 9,2 - 40,3 kW

Control
Plug&Play Advanced PRO
+ IR remote control
(Optional Clever Control)

Casing [**]
Galvanised Steel
(Faceted or Smooth)

Grille type
Circular perforated

Outlet lamellas
Aluminium, airfoil type
Adjustable 0-15º each side

[*] Consult separate DX catalogs
[**] Customizable dimensions on request

RUND is a cylindrical, elegant and exclusive decorative air curtain. Vertically installed on one or both sides of the door; horizontally above the entrance or encompassing large distances, RUND air curtains integrate seamlessly with the surrounding environment as an architectural column element. Wide range of accessories and configurations available to suit any need that requires the installation. Multiple finishes that make it the decorative solution suitable for any interior design project. Available in two different casing finishes (faceted or completely smooth).

This air curtain model works with double-inlet centrifugal fans driven by an external rotor motor with low noise level. EC models assembled with very low consumption efficiency fans.

Advanced Plug&Play control. Includes: Advanced PRO control with LCD display and integrated thermostat, door contact, 7m RJ11 cable and remote control. Optional: intelligent Clever PRO Control (automatic, programmable, modbus for PLC, timer, etc).

UNHEATED

Model	Airflow	Ventilation power 230V~50Hz	Ventilation current 230V~50Hz	Noise level (5 m)	Weight
	m³/h	kW	A	dB (A)	kg
RUND M 1000 A	1980	0,318	1,41	55	42
RUND M 1500 A	2640	0,424	1,88	56	63
RUND M 2000 A	3960	0,636	2,82	57	79
RUND M 2500 A	4620	0,742	3,29	58	88
RUND M 3000 A	5280	0,848	3,76	59	99
RUND G 1000 A	2400	0,642	2,85	57	46
RUND G 1500 A	3200	0,856	3,80	58	68
RUND G 2000 A	4800	1,284	5,70	59	89
RUND G 2500 A	5600	1,498	6,65	60	98
RUND G 3000 A	6400	1,712	7,60	61	108
RUND ECG 1000 A	2700	0,213	1,86	61	46
RUND ECG 1500 A	3600	0,284	2,48	62	68
RUND ECG 2000 A	5400	0,426	3,72	63	89
RUND ECG 2500 A	6300	0,497	4,34	64	98
RUND ECG 3000 A	7200	0,568	4,96	65	108

ELECTRICAL HEATED

Model	Airflow	Electrical heating capacity 400Vx3~50Hz (*)	Ventilation power 230V~50Hz	Ventilation current 230V~50Hz	Noise level (5 m)	Weight
	m³/h	kW	kW	A	dB(A)	kg
RUND M 1000 E	1980	3/6/9	0,318	1,41	55	49
RUND M 1500 E	2640	4/8/12	0,424	1,88	56	75
RUND M 2000 E	3960	6/12/18	0,636	2,82	57	97
RUND M 2500 E	4620	6/12/18	0,742	3,29	58	108
RUND M 3000 E	5280	8/16/24	0,848	3,76	59	119
RUND G 1000 E	2400	5/10/15	0,642	2,85	57	54
RUND G 1500 E	3200	7,5/15/22,5	0,856	3,80	58	81
RUND G 2000 E	4800	10/20/30	1,284	5,70	59	107
RUND G 2500 E	5600	10/20/30	1,498	6,65	60	118
RUND G 3000 E	6400	10/20/30	1,712	7,60	61	128
RUND ECG 1000 E	2700	5/10/15	0,213	1,86	61	54
RUND ECG 1500 E	3600	7,5/15/22,5	0,284	2,48	62	81
RUND ECG 2000 E	5400	10/20/30	0,426	3,72	63	107
RUND ECG 2500 E	6300	10/20/30	0,497	4,34	64	118
RUND ECG 3000 E	7200	10/20/30	0,568	4,96	65	128

(*) Under request other electrical heating power can be limited.

WATER HEATED

Model	Airflow	P86 (80/60°C)		P64 (60/40°C)		P54 (50/40°C)		Ventilation power 230V~50Hz	Ventilation current 230V~50Hz	Noise level (5 m)	Weight
		Water heating capacity	Water pressure drop	Water heating capacity	Water pressure drop	Water heating capacity	Water pressure drop				
	m³/h	kW	Pa	kW	Pa	kW	Pa	kW	A	dB(A)	kg
RUND M 1000 P	1860	9,84	1000	9,22	4990	-	-	0,318	1,41	55	47
RUND M 1500 P	2480	14,23	760	13,65	6430	-	-	0,424	1,88	56	71
RUND M 2000 P	3720	22,17	2190	19,70	5470	-	-	0,636	2,82	57	90
RUND M 2500 P	4340	27,69	4000	23,48	4060	-	-	0,742	3,29	58	101
RUND M 3000 P	4960	33,15	6560	28,29	6730	-	-	0,848	3,76	59	112
RUND G 1000 P	2250	11,04	1230	10,42	6190	10,56	1790	0,642	2,85	57	52
RUND G 1500 P	3000	16,02	940	15,47	8020	16,37	5670	0,856	3,80	58	77
RUND G 2000 P	4500	24,92	2700	22,29	6810	23,15	3030	1,284	5,70	59	100
RUND G 2500 P	5250	31,16	4930	26,61	5060	28,76	5450	1,498	6,65	60	109
RUND G 3000 P	6000	37,35	8110	32,10	8410	34,03	5450	1,712	7,60	61	119
RUND ECG 1000 P	2550	11,89	1400	11,27	7110	11,50	2090	0,213	1,86	61	52
RUND ECG 1500 P	3400	17,29	1070	16,77	9240	17,86	6620	0,284	2,48	62	77
RUND ECG 2000 P	5100	26,86	3080	24,14	7850	25,24	3530	0,426	3,72	63	100
RUND ECG 2500 P	5950	33,63	5650	28,84	5840	31,38	6360	0,497	4,34	64	109
RUND ECG 3000 P	6800	40,34	9290	34,81	9710	37,16	8400	0,568	4,96	65	119

Water heated: connection pipes P86 and P64 are 2x3/4" female (male if lateral pipes), P54 2x1" male.
P86 2 rows coil, P64 3 rows coil, P54 4 rows coil.

Selection program

Dimensions

Horizontal installation

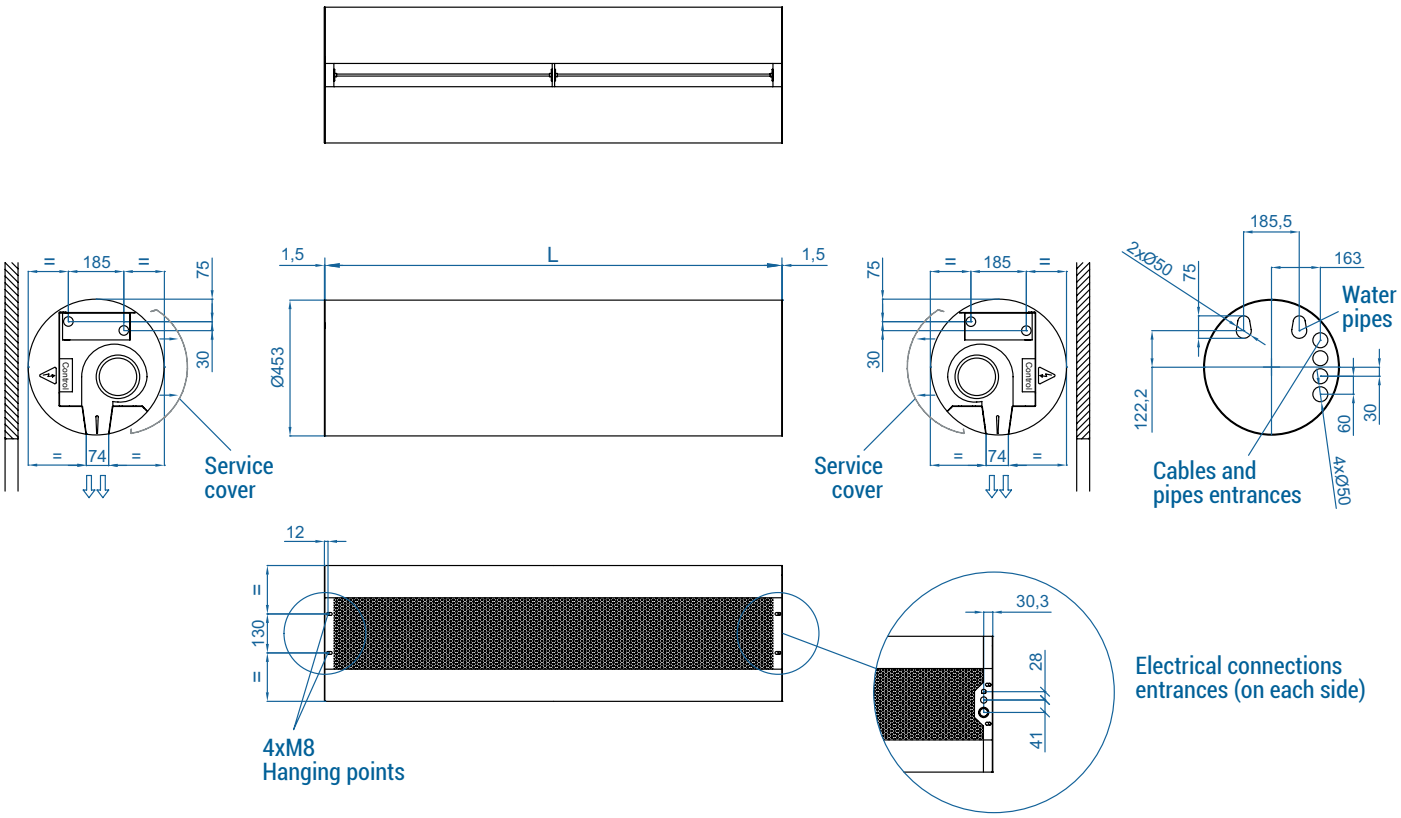

Vertical installation

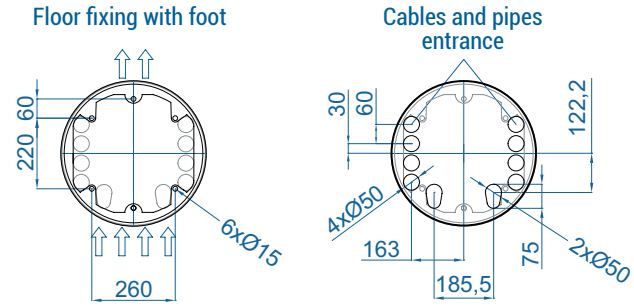

	L
RUND 1000	1025
RUND 1500	1525
RUND 2000	2030
RUND 2500	2530
RUND 3000	2980

Customizable dimensions on request.

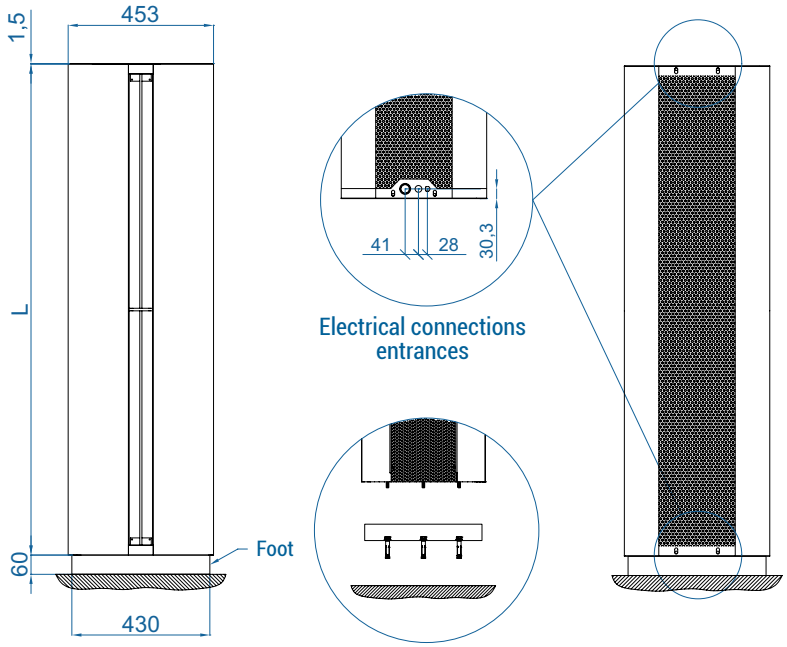

CAD drawings, BIM files, installation manuals and other documentation

CAD BIM

Installation configurations and finishes

Wide variety of finishes available

SEE FINISHES CATALOGUE

WATCH VIDEO

Multiple installation configurations and brackets

Optional accessories

Supports and installation

Wall rail supports SPWR

Silentblock supports SPANG-SIL / SLB

Suspension cables SPCT

180º straight arm Rund

Round arm Rund

Kit junction Rund ceiling / wall

Side bracket Rund ceiling / wall

Foot support SPF-Rund (Galv. / SS)

Control

ADVANCED PRO
✔ Included

IR Control
✔ Included

RJ11 Cable
✔ Included

CLEVER PRO

Filters

Removable prefilter G2

Sensors and valves

Magnetic door contact MAG-DC
✔ Included

Mechanical door contact MEG-DC

External Temperature Sensor

Solenoid valve V-S

Valve 3 ways V-T

Proportional valve V-ACT

Technical Features

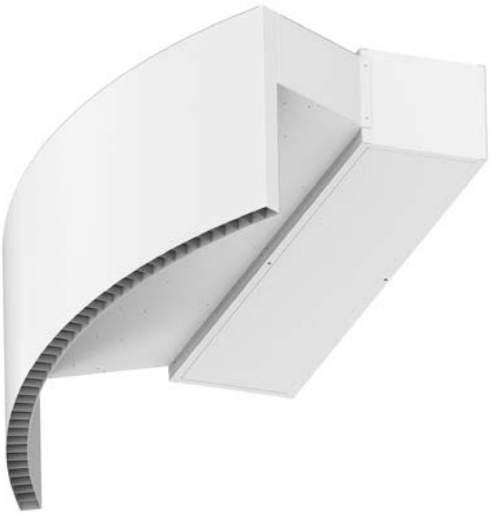

Maximum range
G : 4 m ECG : 4,2 m

Airflow / Length
2250 - 6300 m³/h
1 m to 2,5 m

Fans
Centrifugal
5-speed

Heating types
E : electrical 3 stages
P : water
A : unheated
DX : heat pump [*]

Heating capacity
E : 5 - 30 kW
P : 10,4- 33,6 kW

Control
Plug&Play Advanced PRO
+ IR remote control
(Optional Clever Control)

Casing [**]
Galvanised Steel

Grille type
Rectangular perforated

Outlet lamellas
Aluminium, airfoil type

RAL 9016 standard

Other colors on request

Stainless steel

[*] Consult separate DX catalogs
[**] Each air curtainis tailor made

ROTOWIND air curtains are custom designed to fit perfectly with the curvature of any revolving door. They can be mounted discreetly in two possible layout configurations, with tailored dimensions: standard (on top mounting) or inverted (false ceiling mounting).
Self-supporting casing construction finished in white colour RAL9016 as standard. Other colours or stainless steel are available on request.

This air curtain model works with double-inlet centrifugal fans driven by an external rotor motor with low noise level. EC models assembled with very low consumption efficiency fans. With large perforated inlet grille avoiding intensive maintenance.

Advanced Plug&Play control. Includes: Advanced PRO control with LCD display and integrated thermostat, door contact, 7m RJ11 cable and remote control. Optional: intelligent Clever PRO Control (automatic, programmable, modbus for PLC, timer, etc).

UNHEATED

Model	Airflow	Ventilation power 230V~50Hz	Ventilation current 230V~50Hz	Noise level (5 m)	Weight
	m³/h	kW	A	dB (A)	kg
ROTO G 1000 A	2400	0,642	2,85	57	-
ROTO G 1500 A	3200	0,856	3,80	58	-
ROTO G 2000 A	4800	1,284	5,70	59	-
ROTO G 2500 A	5600	1,498	6,65	60	-
ROTO ECG 1000 A	2700	0,213	1,86	61	-
ROTO ECG 1500 A	3600	0,284	2,48	62	-
ROTO ECG 2000 A	5400	0,426	3,72	63	-
ROTO ECG 2500 A	6300	0,497	4,34	64	-

ELECTRIC HEATED

Model	Airflow	Electrical heating capacity 400Vx3~50Hz (*)	Ventilation power 230V~50Hz	Ventilation current 230V~50Hz	Noise level (5 m)	Weight
	m³/h	kW	kW	A	dB(A)	kg
ROTO G 1000 E	2400	5/10/15	0,642	2,85	57	-
ROTO G 1500 E	3200	7,5/15/22,5	0,856	3,80	58	-
ROTO G 2000 E	4800	10/20/30	1,284	5,70	59	-
ROTO G 2500 E	5600	10/20/30	1,498	6,65	60	-
ROTO ECG 1000 E	2700	5/10/15	0,213	1,86	61	-
ROTO ECG 1500 E	3600	7,5/15/22,5	0,284	2,48	62	-
ROTO ECG 2000 E	5400	10/20/30	0,426	3,72	63	-
ROTO ECG 2500 E	6300	10/20/30	0,497	4,34	64	-

(*) Under request other electrical heating power can be limited.

WATER HEATED

Model	Airflow	P86 (80/60ºC)		P64 (60/40ºC)		P54 (50/40ºC)		Ventilation power 230V~50Hz	Ventilation current 230V~50Hz	Noise level (5 m)	Weight
		Water heating capacity	Water pressure drop	Water heating capacity	Water pressure drop	Water heating capacity	Water pressure drop				
	m³/h	kW	Pa	kW	Pa	kW	Pa	kW	A	dB(A)	kg
ROTO G 1000 P	2250	11,04	1230	10,42	6190	10,56	1790	0,642	2,85	57	-
ROTO G 1500 P	3000	16,02	940	15,47	8020	16,37	5670	0,856	3,80	58	-
ROTO G 2000 P	4500	24,92	2700	22,29	6810	23,15	3030	1,284	5,70	59	-
ROTO G 2500 P	5250	31,16	4930	26,61	5060	28,76	5450	1,498	6,65	60	-
ROTO ECG 1000 P	2550	11,89	1400	11,27	7110	11,50	2090	0,213	1,86	61	-
ROTO ECG 1500 P	3400	17,29	1070	16,77	9240	17,86	6620	0,284	2,48	62	-
ROTO ECG 2000 P	5100	26,86	3080	24,14	7850	25,24	3530	0,426	3,72	63	-
ROTO ECG 2500 P	5950	33,63	5650	28,84	5840	31,38	6360	0,497	4,34	64	-

Water heated: connection pipes P86 and P64 are 2x3/4" female (male if lateral pipes), P54 2x1" male.
P86 2 rows coil, P64 3 rows coil, P54 4 rows coil.

Selection program

Installation configurations

Standard: Above de door

Mounted installation

Hanging installation

Inverted: False ceiling mounting

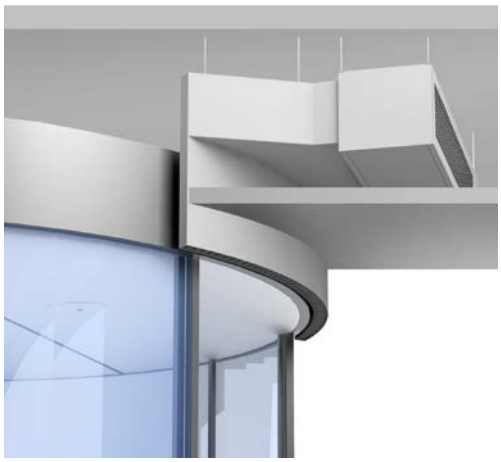

Dimensions

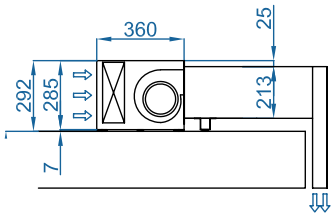

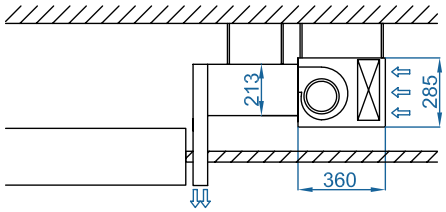

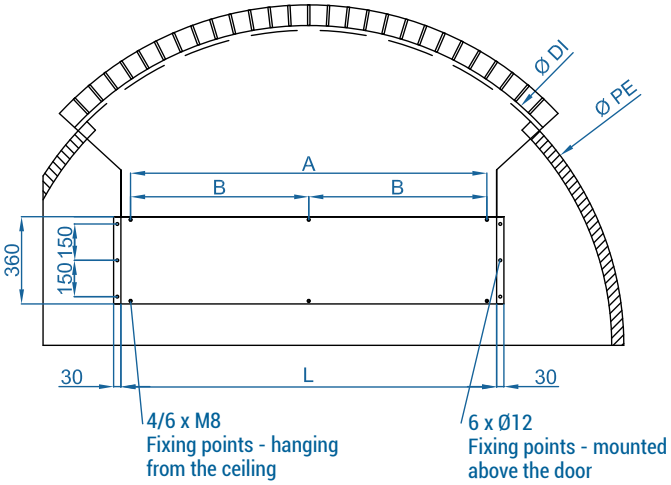

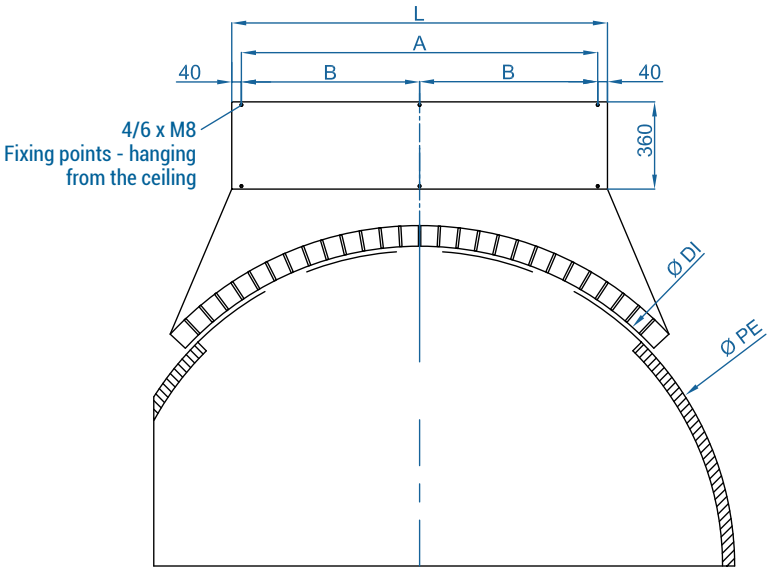

	L	I	A
ROTO 1000	1050	970	-
ROTO 1500	1550	1470	735
ROTO 2000	2055	1975	987,5
ROTO 2500	2555	2475	1237,5

Customizable dimensions on request.

Ø DI	Inside Outlet Diameter
Ø PE	External Door Diameter

Tailor made finishes

ROTOWIND can be customized in the same color or material as the revolving door to match the interior or exterior aesthetics of the building. Optionally, it can be ordered with a front decorative cover, which can be painted in a different color or finish. It can also be customized with logos, graphics or signage.

Multiple options available for accessories and supports to adapt to the installation requirements.

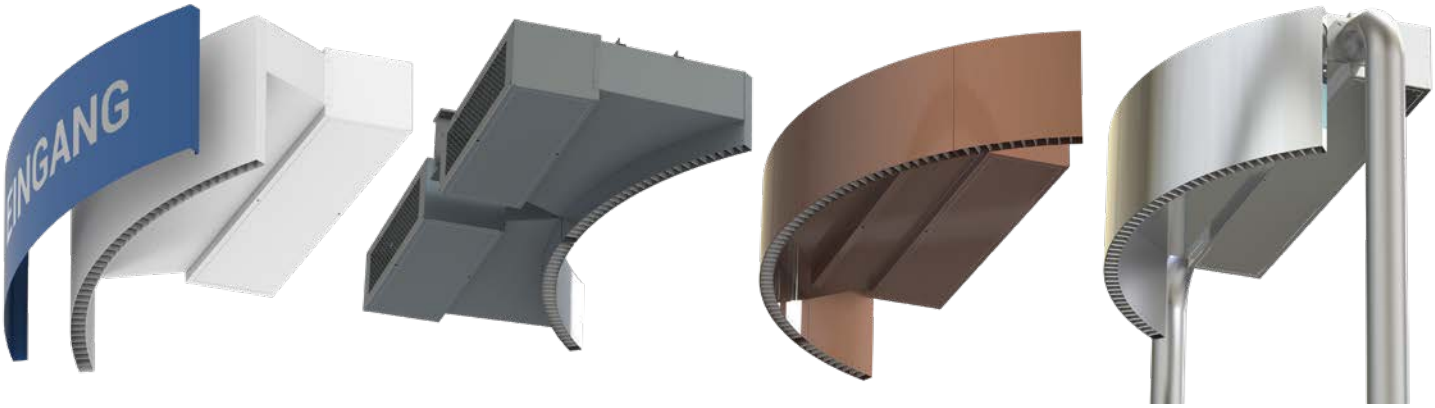

Optional acessories

Supports and installation

Decorative front cover (RAL Painted / SS)

Support angle (top mounting)
✔ Included

Silentblock support (top mounting)
✔ Included

Silentblock supports SPANG-SIL / SLB

Suspension cables SPCT

Round arm Rotowind

Control

ADVANCED PRO
✔ Included

IR Control
✔ Included

RJ11 Cable
✔ Included

CLEVER PRO

Filters

Removable prefilter G2

Sensors and valves

Magnetic door contact MAG-DC
✔ Included

Mechanical door contact MEC-DC

External Temperature Sensor

Solenoid valve V-S

Valve 3 ways V-T

Proportional valve V-ACT

Condensation

Condensation tray

Technical features

Maximum range
M : 3,5 m ECM : 3,8 m
G : 4 m ECG : 4,2 m

Airflow / Length
1800 - 7200 m³/h
1 m to 3 m

Fans
Centrifugal
5-speed

Heating types
A: unheated

Heating capacity
-

Control
Plug&Play Advanced PRO + IR remote control (Optional Clever Control)

Casing
Galvanised steel / Stainless Steel

Grille type
Circular perforated

Outlet lamellas
Aluminium, airfoil type
Adjustable 0-15º each side

RAL 9016 standard

Stainless steel

Other colors on request

KOOL unheated air curtain ensures a low turbulence high velocity air jet, thus efficiently separating spaces with high temperature differences.
With a compact timeless design provided with a faceted inlet grille avoiding intensive maintenance. It works with double-inlet centrifugal fans driven by an external rotor motor and low noise level. EC models assembled with very low consumption efficiency fans.

Advanced Plug&Play control. Includes: Advanced PRO control with LCD display and integrated thermostat, door contact, 7m RJ11 cable and remote control. Optional: intelligent Clever PRO Control (automatic, programmable, modbus for PLC, timer, etc).

UNHEATED

Model	Airflow	Ventilation power 230V~50Hz	Ventilation current 230V~50Hz	Noise Level (5 m)	Weight
	m³/h	kW	A	dB(A)	kg
KM 1000 A	1800	0,212	0,94	55	29
KM 1500 A	2700	0,318	1,41	56	44
KM 2000 A	3600	0,424	1,88	57	53
KM 2500 A	4500	0,530	2,35	58	58
KM 3000 A	5400	0,636	2,82	59	76
KECM 1000 A	1840	0,142	1,24	56	33
KECM 1500 A	2760	0,213	1,86	57	50
KECM 2000 A	3680	0,284	2,48	58	61
KECM 2500 A	4600	0,355	3,10	59	68
KECM 3000 A	5520	0,426	3,72	60	76
KG 1000 A	2400	0,642	2,85	57	37
KG 1500 A	3200	0,856	3,80	58	55
KG 2000 A	4800	1,284	5,70	59	71
KG 2500 A	5600	1,498	6,65	60	78
KG 3000 A	6400	1,712	7,60	61	86
KECG 1000 A	2700	0,213	1,86	61	37
KECG 1500 A	3600	0,284	2,48	62	56
KECG 2000 A	5400	0,426	3,72	63	71
KECG 2500 A	6300	0,497	4,34	64	78
KECG 3000 A	7200	0,568	4,96	65	86

Selection program

Dimensions

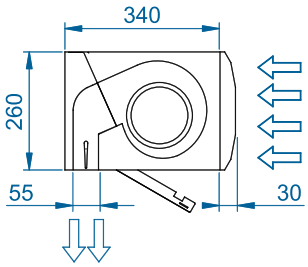

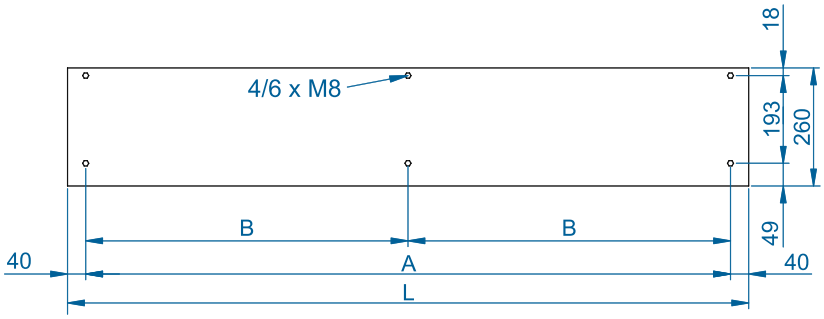

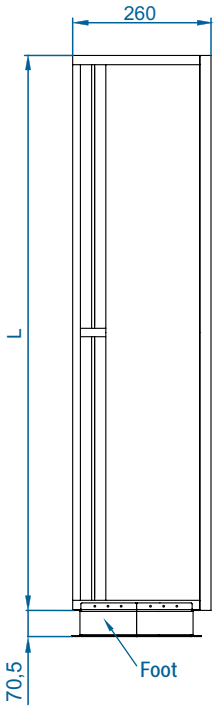

L	A	B
1000	920	-
1500	1420	710
2000	1920	960
2500	2420	1210
3000	2920	1460

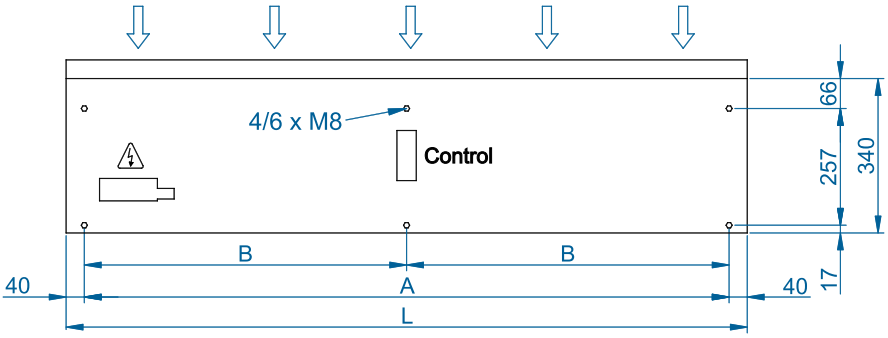

Optional accessories

Supports

Wall rail support
SPWR

Silentblock supports
SPANG-SIL / SLB

Suspension cables
SPCT

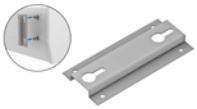

Omega wall support
SPT3

Foot support
SPF-KOOL
(Galv. / SS)

Joining kit
SPJ-KOOL
(Galv. / SS)

Control

ADVANCED PRO
✔ Included

IR Control
✔ Included

RJ11 Cable
✔ Included

CLEVER PRO

Sensors

Mechanical door contact
MEC-DC

Magnetic door contact
MAG-DC
✔ Included

External Temperature
Sensor

CAD drawings, BIM files, installation manuals and other documentation

CAD BIM

Technical Features

RAL 9016 standard

Other colors on request

Maximum range
M : 3,5 m ECM : 3,8 m
G : 4 m ECG : 4,2 m

Airflow / Length
1800 - 6300 m³/h
1 m to 2,5 m

Fans
Centrifugal
5-speed

Heating types
A: unheated

Heating capacity
-

Control
Plug&Play Advanced PRO + IR remote control (Optional Clever Control)

Casing
Galvanised Steel

Grille type
Suction lamellas

Outlet lamellas
Aluminium

RECESSED COMPACT air curtain is specially designed for non-heating applications. This recessed low profile model has a diffuser grille with an integral view, and a self-supporting frame for installation in false ceilings. Its design is characterized by providing a full view of the inlet and outlet slatted grille, which is maintenance-free and is completely integrated into a single frame colour RAL 9016 Other colours are available on request.
This air curtain model works with double-inlet centrifugal fans driven by an external rotor motor with low noise level. EC models assembled with very low consumption efficiency fans.

Advanced Plug&Play control. Includes: Advanced PRO control with LCD display and integrated thermostat, door contact, 7m RJ11 cable and remote control. Optional: intelligent Clever PRO Control (automatic, programmable, modbus for PLC, timer, etc).

UNHEATED

Model	Airflow	Ventilation power 230V~50Hz	Ventilation current 230V~50Hz	Noise level (5 m)	Weight
	m³/h	kW	A	dB(A)	kg
CR M 1000 A	1800	0,212	0,94	55	33
CR M 1500 A	2700	0,318	1,41	56	50
CR M 2000 A	3600	0,424	1,88	57	61
CR M 2500 A	4500	0,530	2,35	58	68
CR ECM 1000 A	1840	0,142	1,24	56	33
CR ECM 1500 A	2760	0,213	1,86	57	50
CR ECM 2000 A	3680	0,284	2,48	58	61
CR ECM 2500 A	4600	0,355	3,10	59	68
CR G 1000 A	2400	0,642	2,85	57	37
CR G 1500 A	3200	0,856	3,80	58	55
CR G 2000 A	4800	1,284	5,70	59	71
CR G 2500 A	5600	1,498	6,65	60	78
CR ECG 1000 A	2700	0,213	1,86	61	37
CR ECG 1500 A	3600	0,284	2,48	62	56
CR ECG 2000 A	5400	0,426	3,72	63	71
CR ECG 2500 A	6300	0,497	4,34	64	78

Dimensions

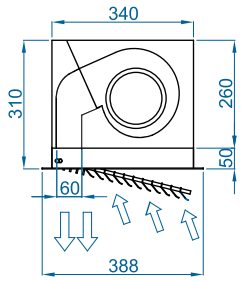

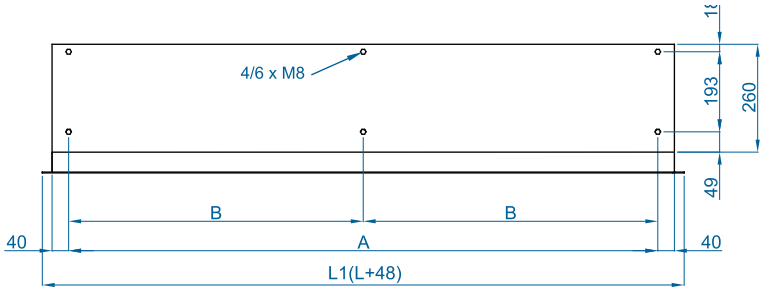

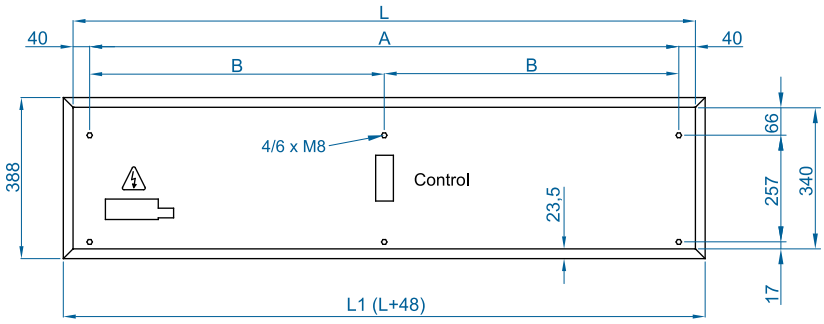

	L	L1	A	B
RC 1000	1000	1048	920	-
RC 1500	1500	1548	1420	710
RC 2000	2000	2048	1920	960
RC 2500	2500	2548	2420	1210

Selection program

CAD drawings, BIM files, installation manuals and other documentation

CAD BIM

Optional accessories

Supports and installation

Wall rail supports
SPWR

Silentblock supports
SPANG-SIL / SLB

Suspension cables
SPCT

Control

ADVANCED PRO
✔ Included

IR Control
✔ Included

RJ11 Cable
✔ Included

CLEVER PRO

Sensors

Mechanical door contact
MEC-DC

Magnetic
door contact MAG-DC
✔ Included

External Temperature
Sensor

Technical Features

RAL 9016 standard

Other colors on request

Stainless steel

Maximum range
SB : 5 m BB : 7 m

Airflow / Length
2910 - 10720 m³/h
1 m to 3 m

Fans
Centrifugal
5-speed

Heating types
E : electrical 3 stages
P : water
A : unheated
DX : heat pump [*]

Heating capacity
E : 5 - 50 kW
P : 12,4 - 55,0 kW

Control
Plug&Play Advanced PRO
+ IR remote control
(Optional Clever Control)

Casing [**]
Galvanised Steel

Grille type
Micro-perforated
with prefilter function

Outlet lamellas
Aluminium, airfoil type
Adjustable 0-15º each side

[*] Consult separate DX catalogs
[**] Customizable dimensions on request

Commercial size air curtain with an equivalent power to an industrial unit. As all the standard range of Airtècnics air curtains, WINDBOX SB-BB has an elegant and timeless design. A highly versatile air curtain provided with a wide variety of technical specifications, mounting options and customization, gathering all the latest innovations and developments.

This model works with the latest generation of double-inlet centrifugal high efficiency EC fans driven by an external rotor motor, with low noise level and very low consumption.

Advanced Plug&Play control. Includes: Advanced PRO control with LCD display and integrated thermostat, door contact, 7m RJ11 cable and remote control. Optional: intelligent Clever PRO Control (automatic, programmable, modbus for PLC, timer, etc).

UNHEATED

Model	Airflow	Ventilation power 230V~50Hz	Ventilation current 230V~50Hz	Noise level (5 m)	Weight
	m³/h	kW	A	dB (A)	kg
SB 1000 A	3060	0,523	3,8	62	37
SB 1500 A	4080	0,697	5,07	63	54
SB 2000 A	6120	1,046	7,61	64	75
SB 2500 A	7140	1,22	8,87	65	91
SB 3000 A	8160	1,395	10,14	66	107
BB 1000 A	4020	0,873	3,87	66	38
BB 1500 A	5360	1,164	5,16	67	55
BB 2000 A	8040	1,746	7,74	68	77
BB 2500 A	9380	2,037	9,03	69	93
BB 3000 A	10720	2,328	10,32	70	110

ELECTRIC HEATED

Model	Airflow	Electrical heating capacity 400Vx3~50Hz (*)	Ventilation power 230V~50Hz	Ventilation current 230V~50Hz	Noise level (5 m)	Weight
	m³/h	kW	kW	A	dB(A)	kg
SB 1000 E	3060	5/10/15	0,523	3,8	62	48
SB 1500 E	4080	7,5/15/22,5	0,697	5,07	63	70
SB 2000 E	6120	10/20/30	1,046	7,61	64	96
SB 2500 E	7140	12/22/34 (**)	1,22	8,87	65	117
SB 3000 E	8160	16/26/42 (**)	1,395	10,14	66	138
BB 1000 E	4020	6/15/21	0,873	3,87	66	49
BB 1500 E	5360	8/19/27	1,164	5,16	67	71
BB 2000 E	8040	12/30/42 (**)	1,746	7,74	68	98
BB 2500 E	9380	16/30/46 (**)	2,037	9,03	69	119
BB 3000 E	10720	20/30/50 (**)	2,328	10,32	70	141

(*) Under request other electrical heating power can be limited.

(**) 2 separated power supplies.

WATER HEATED

Model	Airflow	P86 (80/60ºC)		P64 (60/40ºC)		P54 (50/40ºC)		Ventilation power 230V~50Hz	Ventilation current 230V~50Hz	Noise level (5 m)	Weight
		Water heating capacity	Water pressure drop	Water heating capacity	Water pressure drop	Water heating capacity	Water pressure drop				
	m³/h	kW	Pa	kW	Pa	kW	Pa	kW	A	dB(A)	kg
SB 1000 P	2910	15,58	8280	12,44	8640	14,47	9820	0,523	3,8	62	46
SB 1500 P	3880	19,71	630	18,55	5840	21,19	12380	0,697	5,07	63	66
SB 2000 P	5820	31	1860	25,84	4580	30,77	10270	1,046	7,61	64	91
SB 2500 P	6790	38,97	3440	31,79	7160	36,94	9570	1,22	8,87	65	113
SB 3000 P	7760	46,94	5710	38,31	5970	42,6	6520	1,395	10,14	66	132
BB 1000 P	3750	18,21	15190	15,16	16190	16,48	12180	0,873	3,87	65	47
BB 1500 P	5000	23,52	1200	21,87	10990	24,15	15260	1,164	5,16	66	67
BB 2000 P	7500	36,57	3470	31,13	7350	35,04	12680	1,746	7,74	67	93
BB 2500 P	8750	45,78	6370	38,96	13420	42,12	11880	2,037	9,03	68	115
BB 3000 P	10000	55,04	10570	45,49	11230	49,27	10920	2,328	10,32	69	135

Water heated:
P86, P64 2x1", P54 1000-2000 2x1" and 2500-3000 2x1¼".
Connection pipes P86, P64 and P54 are male.
P86 2 rows coil, P64 3 rows coil, P54 4 rows coil.

Selection program

Dimensions

Horizontal installation

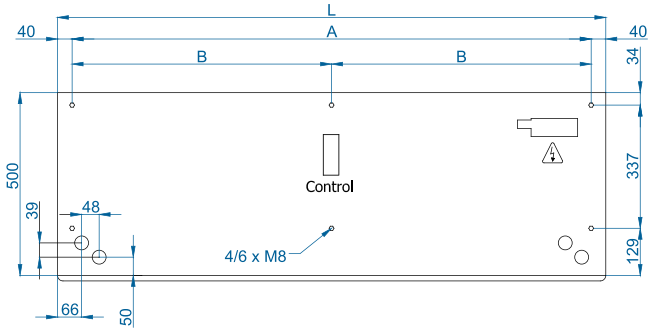

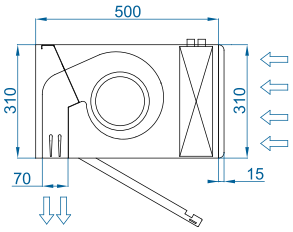

L	A	B
1000	920	-
1500	1420	710
2000	1920	960
2500	2420	1210
3000	2920	1460

Customizable dimensions on request.

Vertical installation

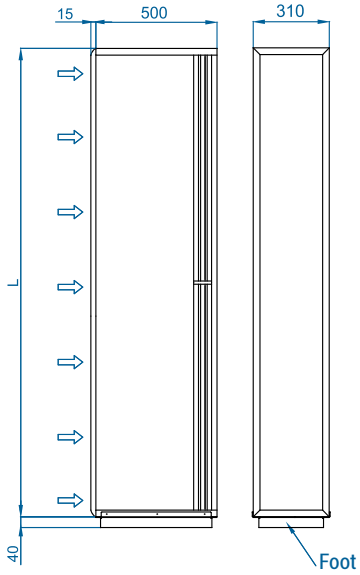

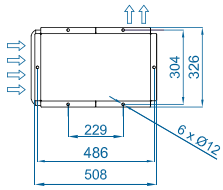

Inside ceiling surface mounting

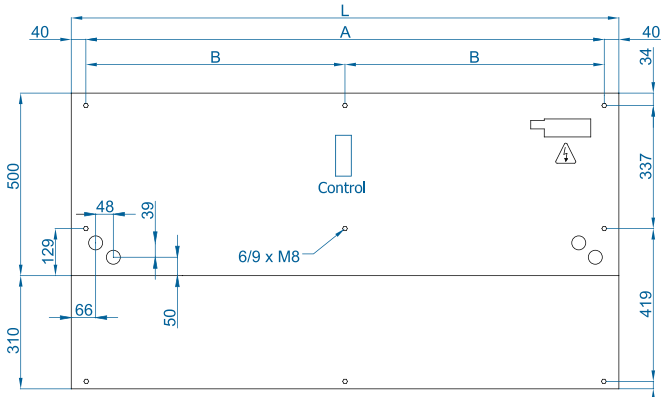

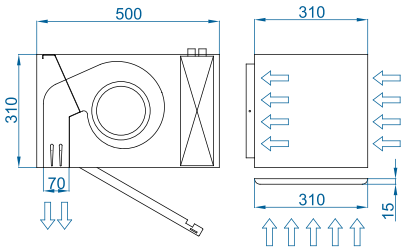

False ceiling invisible mounting

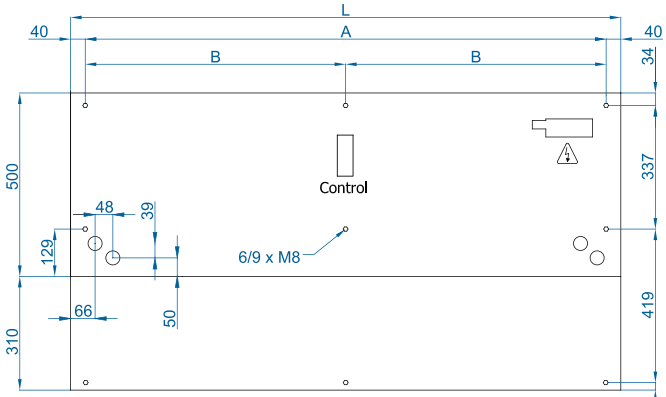

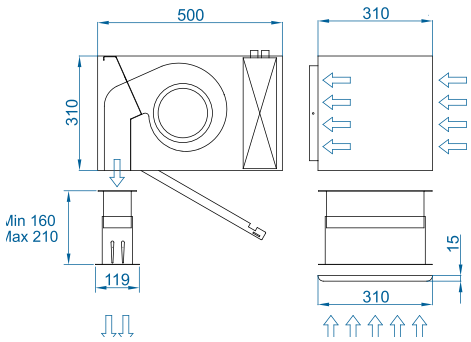

CAD drawings, BIM files, installation manuals and other documentation

CAD BIM

Installation Configurations

With plenum

With plenum and kits

With outlet kit

With inlet and outlet

Optional accessories

Supports and installation

Wall rail supports
SPWR

Silentblock supports
SPANG-SIL / SLB

Suspension cables
SPCT

Foot support
SPF-BB
(Galv. / SS)

Joining kit
SPJ-BB
(Galv. / SS)

Flat inlet and
outlet kits

Service tray
between ID and OD

Control

ADVANCED PRO
✔ **Included**

IR Control
✔ **Included**

RJ11 Cable
✔ **Included**

CLEVER PRO

Filters

Removable
prefilter G2

Sensors and valves

Magnetic
door contact MAG-DC
✔ **Included**

Mechanical
door contact MEC-DC

External Temperature
Sensor

Solenoid valve
V-S

Valve 3 ways
V-T

Proportional valve
V-ACT

Condensation

Condensation tray

Technical Features

Maximum range
SB : 5 m BB : 7 m

Airflow / Length
2910 - 9380 m³/h
1 m to 2,5 m

Fans
Centrifugal
5-speed

Heating types
E : electrical 3 stages
P : water
A : unheated
DX : heat pump [*]

Heating capacity
E : 5 - 46 kW
P : 12,4 - 45,8 kW

Control
Plug&Play Advanced PRO
+ IR remote control
(Optional Clever Control)

Casing
Galvanised Steel

Grille type
Suction lamellas +
Rectangular perforated

Outlet lamellas
Aluminium, airfoil type
Adjustable 0-15º each side

RAL 9016 standard

Other colors on request

Stainless steel

[*] Consult separate DX catalogs

RECESSED WINDBOX SB-BB is a high pressure compact and robust air curtain from our standard range with a timeless design, for recessed installation in false ceilings. It is a suitable air curtain for all types of commercial and industrial entrances.
Inlet grille made with aluminium profiles and blow-out nozzle, integrated in a single white frame colour RAL 9016. Other colours are available on request.

This model works with the latest generation of double-inlet centrifugal high efficiency EC fans driven by an external rotor motor, with low noise level and very low consumption.

Advanced Plug&Play control. Includes: Advanced PRO control with LCD display and integrated thermostat, door contact, 7m RJ11 cable and remote control.
Optional: intelligent Clever PRO Control (automatic, programmable, modbus for PLC, timer, etc).

UNHEATED

Model	Airflow	Ventilation power 230V~50Hz	Ventilation current 230V~50Hz	Noise level (5 m)	Weight
	m³/h	kW	A	dB(A)	kg
RSB 1000 A	3060	0,523	3,8	62	48
RSB 1500 A	4080	0,697	5,07	63	73
RSB 2000 A	6120	1,046	7,61	64	97
RSB 2500 A	7140	1,22	8,87	65	121
RBB 1000 A	4020	0,873	3,87	66	50
RBB 1500 A	5360	1,164	5,16	67	75
RBB 2000 A	8040	1,746	7,74	68	100
RBB 2500 A	9380	2,037	9,03	69	125

ELECTRIC HEATED

Model	Airflow	Electrical heating capacity 400Vx3~50Hz (*)	Ventilation power 230V~50Hz	Ventilation current 230V~50Hz	Noise level (5 m)	Weight
	m³/h	kW	kW	A	dB(A)	kg
RSB 1000 E	3060	5/10/15	0,523	3,8	62	58
RSB 1500 E	4080	7,5/15/22,5	0,697	5,07	63	89
RSB 2000 E	6120	10/20/30	1,046	7,61	64	118
RSB 2500 E	7140	12/22/34 (**)	1,22	8,87	65	147
RBB 1000 E	4020	6/15/21	0,873	3,87	66	60
RBB 1500 E	5360	8/19/27	1,164	5,16	67	91
RBB 2000 E	8040	12/30/42 (**)	1,746	7,74	68	121
RBB 2500 E	9380	16/30/46 (**)	2,037	9,03	69	151

(*) Under request other electrical heating power can be limited.

(**) 2 separated power supplies.

WATER HEATED

Model	Airflow	P86 (80/60°C)		P64 (60/40°C)		P54 (50/40°C)		Ventilation power 230V~50Hz	Ventilation current 230V~50Hz	Noise level (5 m)	Weight
		Water heating capacity	Water pressure drop	Water heating capacity	Water pressure drop	Water heating capacity	Water pressure drop				
	m³/h	kW	Pa	kW	Pa	kW	Pa	kW	A	dB(A)	kg
RSB 1000 P	2910	15,58	8280	12,44	8640	14,47	9820	0,523	3,8	62	56
RSB 1500 P	3880	19,71	630	18,55	5840	21,19	12380	0,697	5,07	63	86
RSB 2000 P	5820	31	1860	25,84	4580	30,77	10270	1,046	7,61	64	114
RSB 2500 P	6790	38,97	3440	31,79	7160	36,94	9570	1,22	8,87	65	142
RBB 1000 P	3750	18,21	15190	15,16	16190	16,48	12180	0,873	3,87	65	58
RBB 1500 P	5000	23,52	1200	21,87	10990	24,15	15260	1,164	5,16	66	88
RBB 2000 P	7500	36,57	3470	31,13	7350	35,04	12680	1,746	7,74	67	117
RBB 2500 P	8750	45,78	6370	38,96	13420	42,12	11880	2,037	9,03	68	146

Water heated:
P86, P64 2x1", P54 1000-2000 2x1" and 2500 2x1¼".
Connection pipes P86, P64 and P54 are male.
P86 2 rows coil, P64 3 rows coil, P54 4 rows coil.

Selection program

Dimensions

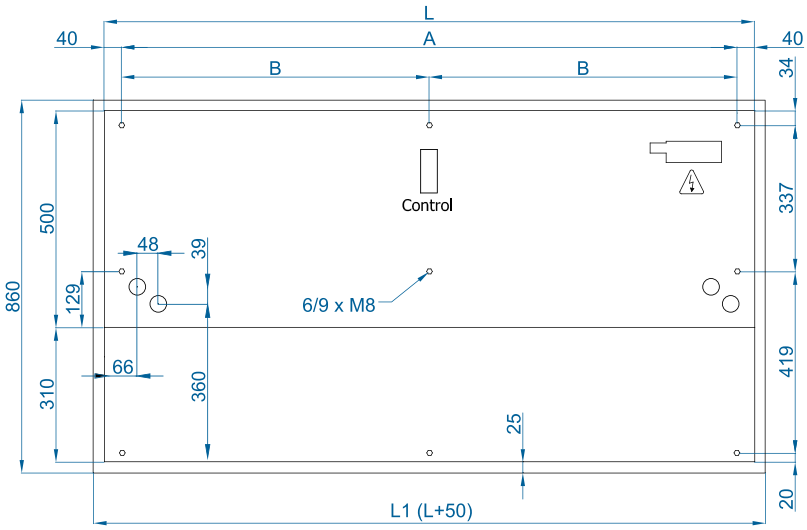

L	A	B
1000	920	-
1500	1420	710
2000	1920	960
2500	2420	1210
3000	2920	1460

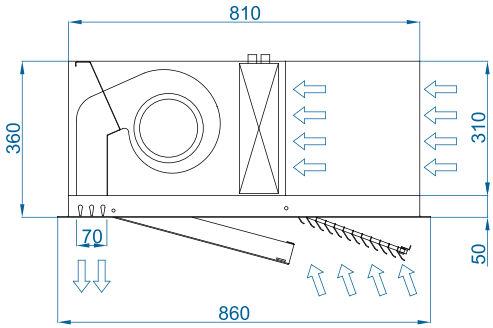

CAD drawings, BIM files, installation manuals and other documentation

CAD BIM

Optional accessories

Supports and installation

Wall rail support
SPWR

Silentblock supports
SPANG-SIL / SLB

Suspension cables
SPCT

Control

ADVANCED PRO
✔ Included

IR Control
✔ Included

RJ11 Cable
✔ Included

CLEVER PRO

Filters

Removable
prefilter G2

Sensors and valves

Magnetic
door contact MAG-DC
✔ Included

Mechanical
door contact MEC-DC

External Temperature
Sensor

Solenoid valve
V-S

Valve 3 ways
V-T

Proportional valve
V-ACT

Condensation

Condensation tray

Technical Features

RAL 9016 standard

Other colors on request

Maximum range
SB : 5 m BB : 7 m

Airflow / Length
2910 - 10720 m³/h
1 m to 3 m

Fans
Centrifugal
5-speed

Heating types
E : electrical 3 stages
P : water
A : unheated
DX : heat pump [*]

Heating capacity
E : 5 - 50 kW
P : 12,4 - 55,0 kW

Control
Plug&Play Advanced PRO
+ IR remote control
(Optional Clever Control)

Casing [**]
Galvanised Steel

Grille type
Rectangular perforated

Outlet lamellas
Aluminium, airfoil type
Adjustable 0-15º each side

[*] Consult separate DX catalogs
[**] Customizable dimensions on request

INVISAIR SB-BB air curtain is designed to be installed invisibly in false ceilings and columns or drawers around the door. It is an ideal solution for those entrances that for architectural reasons require an air curtain installation that is fully integrated into the interior design of the building. BB model has been designed with the latest generation of EC efficiency fans and provides a power and performance equivalent to an industrial air curtain, with very low consumption and low noise level.

Advanced Plug&Play control. Includes: Advanced PRO control with LCD display and integrated thermostat, door contact, 7m RJ11 cable and remote control. Optional: intelligent Clever PRO Control (automatic, programmable, modbus for PLC, timer, etc).

UNHEATED

Model	Airflow	Ventilation power 230V~50Hz	Ventilation current 230V~50Hz	Noise level (5 m)	Weight
	m³/h	kW	A	dB(A)	kg
ISB 1000 A	3060	0,523	3,8	62	44
ISB 1500 A	4080	0,697	5,07	63	64
ISB 2000 A	6120	1,046	7,61	64	85
ISB 2500 A	7140	1,22	8,87	65	93
ISB 3000 A	8160	1,395	10,14	66	112
IBB 1000 A	4020	0,873	3,87	66	46
IBB 1500 A	5360	1,164	5,16	67	66
IBB 2000 A	8040	1,746	7,74	68	88
IBB 2500 A	9380	2,037	9,03	69	97
IBB 3000 A	10720	2,328	10,32	70	116

ELECTRIC HEATED

Model	Airflow	Electrical heating capacity 400Vx3~50Hz (*)	Ventilation power 230V~50Hz	Ventilation current 230V~50Hz	Noise level (5 m)	Weight
	m³/h	kW	kW	A	dB(A)	kg
ISB 1000 E	3060	5/10/15	0,523	3,8	62	56
ISB 1500 E	4080	7,5/15/22,5	0,697	5,07	63	81
ISB 2000 E	6120	10/20/30	1,046	7,61	64	109
ISB 2500 E	7140	12/22/34 (**)	1,22	8,87	65	121
ISB 3000 E	8160	16/26/42 (**)	1,395	10,14	66	144
IBB 1000 E	4020	6/15/21	0,873	3,87	66	58
IBB 1500 E	5360	8/19/27	1,164	5,16	67	83
IBB 2000 E	8040	12/30/42 (**)	1,746	7,74	68	112
IBB 2500 E	9380	16/30/46 (**)	2,037	9,03	69	125
IBB 3000 E	10720	20/30/50 (**)	2,328	10,32	70	148

(*) Under request other electrical heating power can be limited.

(**) 2 separated power supplies.

WATER HEATED

Model	Airflow	P86 (80/60ºC)		P64 (60/40ºC)		P54 (50/40ºC)		Ventilation power 230V~50Hz	Ventilation current 230V~50Hz	Noise level (5 m)	Weight
		Water heating capacity	Water pressure drop	Water heating capacity	Water pressure drop	Water heating capacity	Water pressure drop				
	m³/h	kW	Pa	kW	Pa	kW	Pa	kW	A	dB(A)	kg
ISB 1000 P	2910	15,58	8280	12,44	8640	14,47	9820	0,523	3,8	62	54
ISB 1500 P	3880	19,71	630	18,55	5840	21,19	12380	0,697	5,07	63	78
ISB 2000 P	5820	31	1860	25,84	4580	30,77	10270	1,046	7,61	64	99
ISB 2500 P	6790	38,97	3440	31,79	7160	36,94	9570	1,22	8,87	65	115
ISB 3000 P	7760	46,94	5710	38,31	5970	42,6	6520	1,395	10,14	66	139
IBB 1000 P	3750	18,21	15190	15,16	16190	16,48	12180	0,873	3,87	65	56
IBB 1500 P	5000	23,52	1200	21,87	10990	24,15	15260	1,164	5,16	66	80
IBB 2000 P	7500	36,57	3470	31,13	7350	35,04	12680	1,746	7,74	67	102
IBB 2500 P	8750	45,78	6370	38,96	13420	42,12	11880	2,037	9,03	68	119
IBB 3000 P	10000	55,04	10570	45,49	11230	49,27	10920	2,328	10,32	69	143

Water heated:
P86, P64 2x1", P54 1000-2000 2x1" and 2500-3000 2x1¼".
Connection pipes P86, P64 and P54 are male.
P86 2 rows coil, P64 3 rows coil, P54 4 rows coil.

Selection program

Dimensions

Horitzontal installation

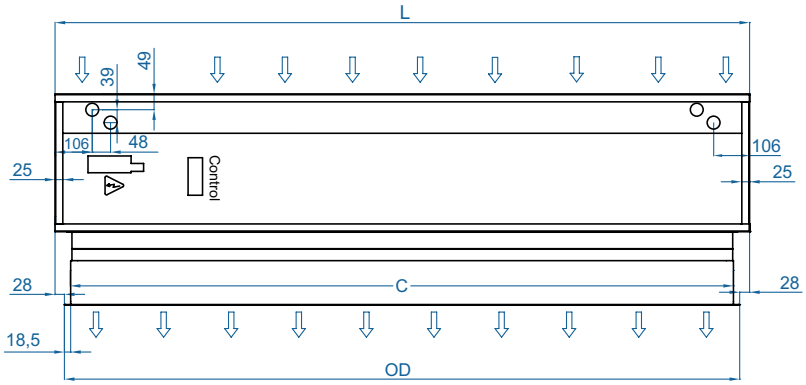

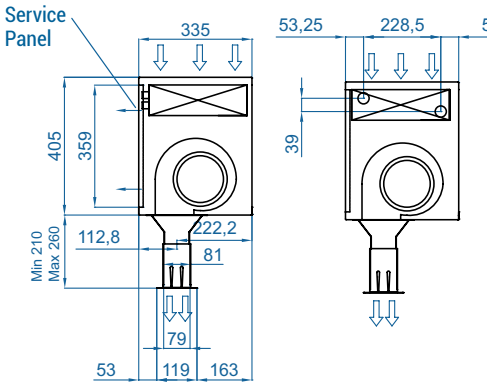

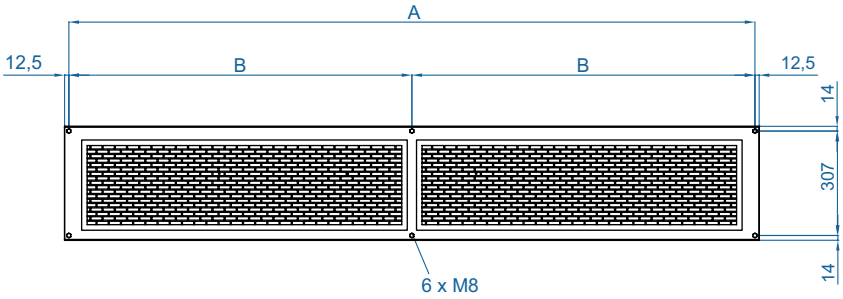

Invisair	L	A	B	C	OD
1000	1050	1025	.	961	998
1500	1550	1525	762,5	1461	1498
2000	2055	2030	1015	1961	1998
2500	2555	2530	1265	2461	2498
3000	3000	2975	1487,5	2961	2998

Customizable dimensions on request

Vertical installation

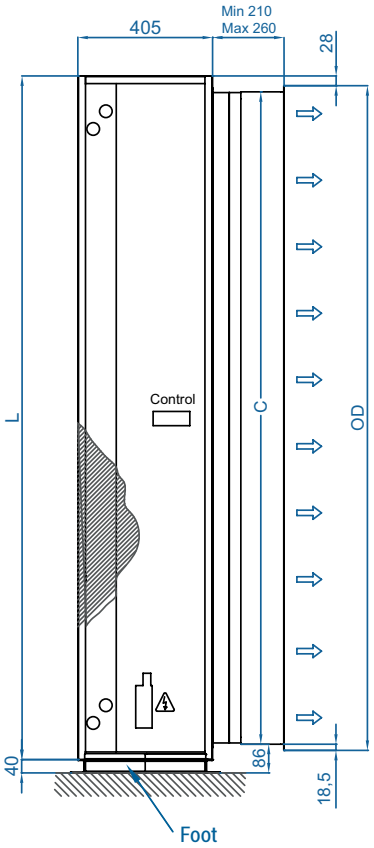

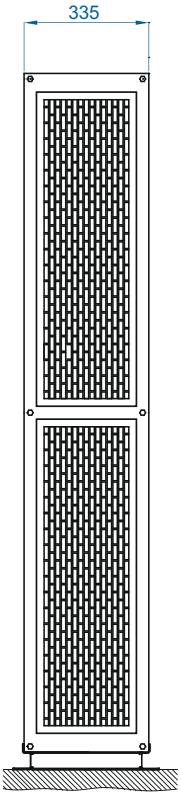

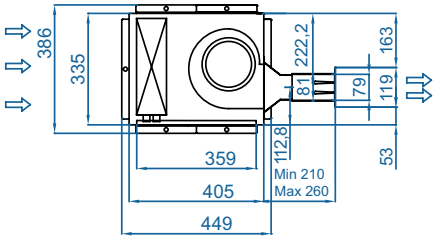

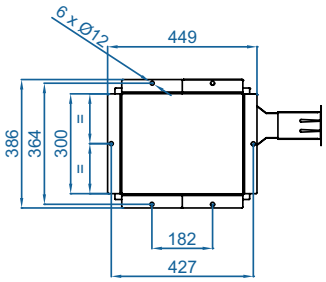

CAD drawings, BIM files, installation manuals and other documentation

CAD BIM

Installation configurations

Optional accessories

Supports and installation

Wall rail supports SPWR

Silentblock supports SPANG-SIL / SLB

Suspension cables SPCT

Wall angle support Invisair BB

Flat inlet grille

Foot support SPF-INVISAIR BB (Galv.)

Joining kit SPJ-INVISAIR BB (Galv.)

Control

ADVANCED PRO
✔ Included

IR Control
✔ Included

RJ11 Cable
✔ Included

CLEVER PRO

Filters

Removable prefilter G2

Sensors and valves

Magnetic door contact MAG-DC
✔ Included

Mechanical door contact MEC-DC

External Temperature Sensor

Solenoid valve V-S

Valve 3 ways V-T

Proportional valve V-ACT

Technical Features

Maximum range
SB : 5 m BB : 7 m

Airflow / Length
2910 - 9380 m³/h
1 m to 2,5 m

Fans
Centrifugal
5-speed

Heating types
E : electrical 3 stages
P : water
A : unheated
DX : heat pump [*]

Heating capacity
E : 5 - 46 kW
P : 12,4 - 45,8 kW

Control
Plug&Play Advanced PRO
+ IR remote control
(Optional Clever Control)

Casing [**]
Galvanised Steel

Grille type
Rectangular perforated

Outlet lamellas
Aluminium, airfoil type
Adjustable 0-15º each side

[*] Consult separate DX catalogs
[**] Customizable dimensions on request

Casing: Black forge (standard)

Panels: Anodized aluminium (standard)

Panels: Stainless Steel (optional)

Other colors and materials on request

Decorative, minimalist and elegant, ZEN air curtain is it the favorite for architects and designers to include in their projects.
ZEN BB air curtain has the same aesthetic and similar dimensional features as the MG model, but with an equivalent power to industrial unit.

Its smart design and high performance is perfect to blend with any building's internal or external aesthetics.
Apart from seamlessly integrating into any space, ZEN can become an active part of the decor and ambience of the premises offering more features than a standard air curtain.
ZEN air curtain offers infinite possibilities of customization. Central casing made of galvanized steel finished in black forge as standard. Front anodized aluminium panels, optionally manufactured in brushed or mirror polished stainless steel. Other materials are possible, such as wood, metal, etc.Other colours are available on request. Special finishes with other materials such as aged metal, wood, glass, PVC / PES, logos, signage, graphics, lights, clocks, vinyl or slogans.

This model works with latest generation double-inlet centrifugal efficiency EC fans driven by an external rotor motor, with low noise level and very low consumption.

Advanced Plug&Play control. Includes: Advanced PRO control with LCD display and integrated thermostat, door contact, 7m RJ11 cable and remote control.
Optional: intelligent Clever PRO Control (automatic, programmable, modbus for PLC, timer, etc).

UNHEATED

Model	Airflow	Ventilation power 230V~50Hz	Ventilation current 230V~50Hz	Noise level (5 m)	Weight
	m³/h	kW	A	dB(A)	kg
ZEN SB 1000 A	3060	0,523	3,8	62	37
ZEN SB 1500 A	4080	0,697	5,07	63	53,5
ZEN SB 2000 A	6120	1,046	7,61	64	75
ZEN SB 2500 A	7140	1,22	8,87	65	90
ZEN BB 1000 A	4020	0,873	3,87	66	39
ZEN BB 1500 A	5360	1,164	5,16	67	55,5
ZEN BB 2000 A	8040	1,746	7,74	68	78
ZEN BB 2500 A	9380	2,037	9,03	69	94

ELECTRIC HEATED

Model	Airflow	Electrical heating capacity 400Vx3~50Hz (*)	Ventilation power 230V-50Hz	Ventilation current 230V-50Hz	Noise level (5 m)	Weight
	m³/h	kW	kW	A	dB(A)	kg
ZEN SB 1000 E	3060	5/10/15	0,523	3,8	62	48
ZEN SB 1500 E	4080	7,5/15/22,5	0,697	5,07	63	69,5
ZEN SB 2000 E	6120	10/20/30	1,046	7,61	64	96
ZEN SB 2500 E	7140	12/22/34 (**)	1,22	8,87	65	116
ZEN BB 1000 E	4020	6/15/21	0,873	3,87	66	49,5
ZEN BB 1500 E	5360	8/19/27	1,164	5,16	67	71,5
ZEN BB 2000 E	8040	12/30/42 (**)	1,746	7,74	68	99
ZEN BB 2500 E	9380	16/30/46 (**)	2,037	9,03	69	120

(*) Under request other electrical heating power can be limited.

(**) 2 separated power supplies.

WATER HEATED

Model	Airflow	P86 (80/60ºC)		P64 (60/40ºC)		P54 (50/40ºC)		Ventilation power 230V~50Hz	Ventilation current 230V~50Hz	Noise level (5 m)	Weight
		Water heating capacity	Water pressure drop	Water heating capacity	Water pressure drop	Water heating capacity	Water pressure drop				
	m³/h	kW	Pa	kW	Pa	kW	Pa	kW	A	dB(A)	kg
ZEN SB 1000 P	2910	15,58	8280	12,44	8640	14,47	9820	0,523	3,8	62	46
ZEN SB 1500 P	3880	19,71	630	18,55	5840	21,19	12380	0,697	5,07	63	66,5
ZEN SB 2000 P	5820	31	1860	25,84	4580	30,77	10270	1,046	7,61	64	92
ZEN SB 2500 P	6790	38,97	3440	31,79	7160	36,94	9570	1,22	8,87	65	111
ZEN BB 1000 P	3750	18,21	15190	15,16	16190	16,48	12180	0,873	3,87	65	47,5
ZEN BB 1500 P	5000	23,52	1200	21,87	10990	24,15	15260	1,164	5,16	66	68,5
ZEN BB 2000 P	7500	36,57	3470	31,13	7350	35,04	12680	1,746	7,74	67	95
ZEN BB 2500 P	8750	45,78	6370	38,96	13420	42,12	11880	2,037	9,03	68	115

Water heated:
P86, P64 2x1", P54 1000-2000 2x1" and 2500 2x1¼".
Connection pipes P86, P64 and P54 are male.
P86 2 rows coil, P64 3 rows coil, P54 4 rows coil.

Selection program

Dimensions

Horizontal installation

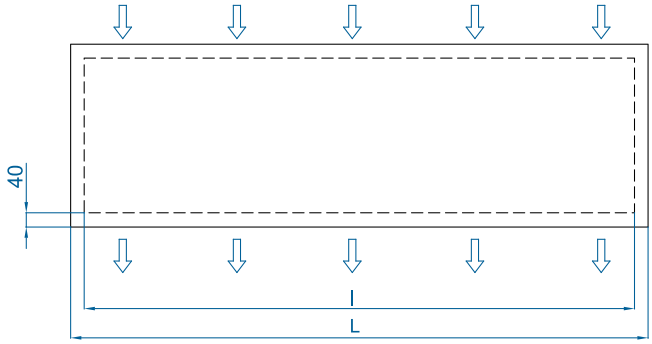

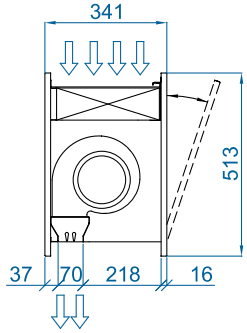

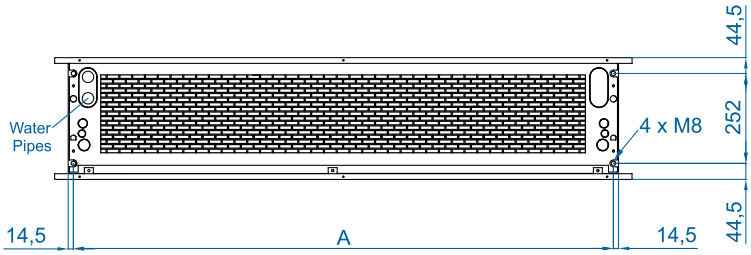

	L	I	A
ZEN SB-BB 1000	1220	1140	1115
ZEN SB-BB 1500	1620	1544	1515
ZEN SB-BB 2000	2120	2044	2015
ZEN SB-BB 2500	2620	2544	2515

Customizable dimensions on request.

Vertical installation

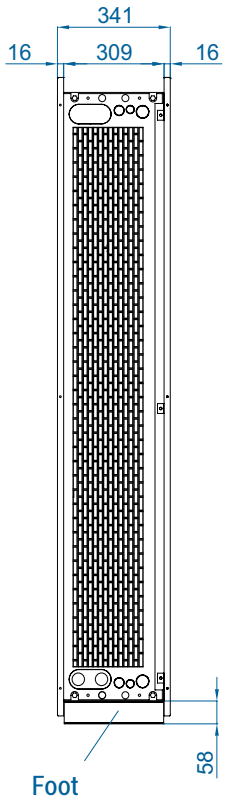

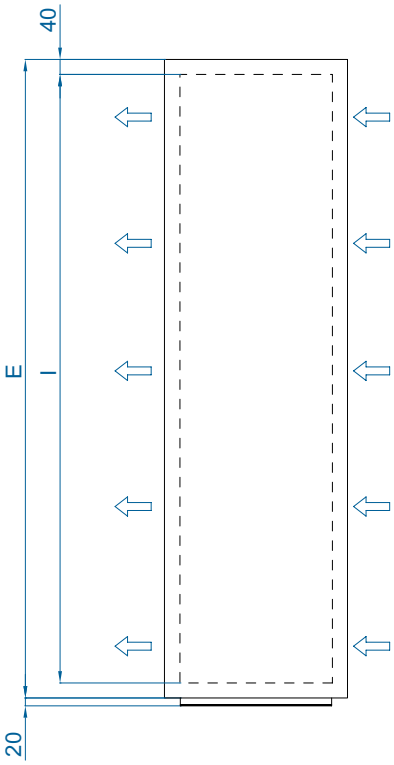

Floor fixing points

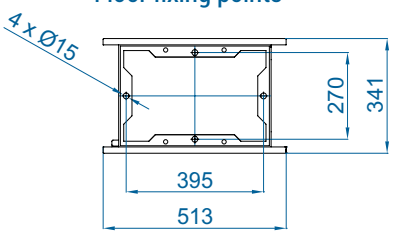

Space available for connections

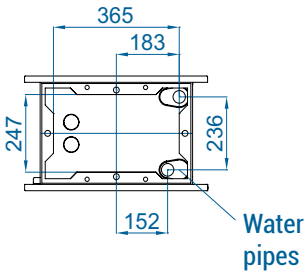

CAD drawings, BIM files, installation manuals and other documentation

CAD BIM

Finishes

The front panel is designed to include graphics, logos, illuminated signs, signage, clocks or any other decorative element desired by the customer. Available in any colour from the RAL chart or in stainless steel.

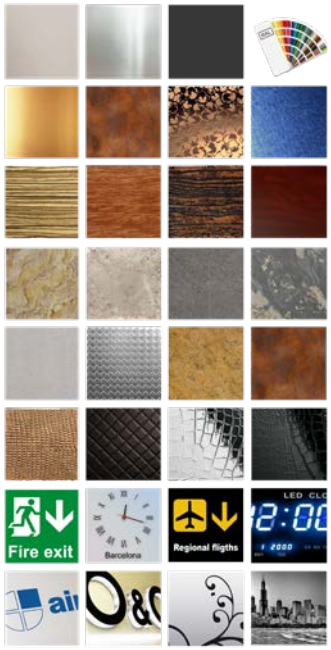

standard / painted

decorative metals

wood

stone

industrial

leather

signage

logos / images

WATCH VIDEO

SEE FINISHES CATALOGUE

Optional accessories

Supports and installation

Wall rail supports SPWR

Silentblock supports SPANG-SIL / SLB

Suspension cables SPCT

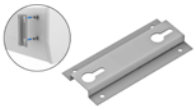

Omega wall support SPT4

Wall angle support

Kit junction SPJ-ZEN BB middle and top

Support Zen arm

Foot support SPF-ZEN BB (Galv. / SS)

Control

ADVANCED PRO
✔ Included

IR Control
✔ Included

RJ11 Cable
✔ Included

CLEVER PRO

Filters

Removable prefilter G2

Sensors and valves

Magnetic door contact MAG-DC
✔ Included

Mechanical door contact MEG-DC

External Temperature Sensor

Solenoid valve V-S

Valve 3 ways V-T

Proportional valve V-ACT

Anti-freezing sensor AFS-INS

Technical Features

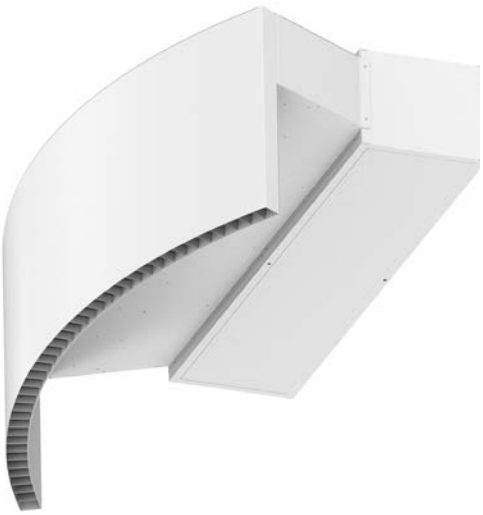

Maximum range
SB : 5 m BB : 7 m

Airflow / Length
2910 - 9380 m³/h
1 m to 2,5 m

Fans
Centrifugal
5-speed

Heating types
E : electrical 3 stages
P : water
A : unheated
DX : heat pump [*]

Heating capacity
E : 5 - 46 kW
P : 12,4 - 45,8 kW

Control
Plug&Play Advanced PRO
+ IR remote control
(Optional Clever Control)

Casing [**]
Galvanised Steel

Grille type
Rectangular perforated

Outlet lamellas
Aluminium, airfoil type

RAL 9016 standard

Other colors on request

Stainless steel

[*] Consult separate DX catalogs
[**] Each air curtain is tailor made

ROTOWIND air curtains are custom designed to fit perfectly with the curvature of any revolving door. They can be mounted discreetly in two possible layout configurations, with tailored dimensions: standard (on top mounting) or inverted (false ceiling mounting).

Self-supporting casing construction finished in white colour RAL9016 as standard. Other colours or stainless steel are available on request. With large perforated inlet grille avoiding intensive maintenance.

This model works with the latest generation of double-inlet centrifugal high efficiency EC fans driven by an external rotor motor, with low noise level and very low consumption.

Advanced Plug&Play control. Includes: Advanced PRO control with LCD display and integrated thermostat, door contact, 7m RJ11 cable and remote control. Optional: intelligent Clever PRO Control (automatic, programmable, modbus for PLC, timer, etc).

UNHEATED

Model	Airflow	Ventilation power 230V~50Hz	Ventilation current 230V~50Hz	Noise level (5 m)	Weight
	m³/h	kW	A	dB(A)	kg
ROTO SB 1000 A	3060	0,523	3,8	62	-
ROTO SB 1500 A	4080	0,697	5,07	63	-
ROTO SB 2000 A	6120	1,046	7,61	64	-
ROTO SB 2500 A	7140	1,22	8,87	65	-
ROTO BB 1000 A	4020	0,873	3,87	66	-
ROTO BB 1500 A	5360	1,164	5,16	67	-
ROTO BB 2000 A	8040	1,746	7,74	68	-
ROTO BB 2500 A	9380	2,037	9,03	69	-

ELECTRIC HEATED

Model	Airflow	Electrical heating capacity 400Vx3~50Hz (*)	Ventilation power 230V-50Hz	Ventilation current 230V-50Hz	Noise level (5 m)	Weight
	m³/h	kW	kW	A	dB(A)	kg
ROTO SB 1000 E	3060	5/10/15	0,523	3,8	62	-
ROTO SB 1500 E	4080	7,5/15/22,5	0,697	5,07	63	-
ROTO SB 2000 E	6120	10/20/30	1,046	7,61	64	-
ROTO SB 2500 E	7140	12/22/34 (**)	1,22	8,87	65	-
ROTO BB 1000 E	4020	6/10/21	0,873	3,87	66	-
ROTO BB 1500 E	5360	8/19/27	1,164	5,16	67	-
ROTO BB 2000 E	8040	12/30/42 (**)	1,746	7,74	68	-
ROTO BB 2500 E	9380	16/30/46 (**)	2,037	9,03	69	-

(*) Under request other electrical heating power can be limited.

(**) 2 separated power supplies.

WATER HEATED

Model	Airflow	P86 (80/60ºC)		P64 (60/40ºC)		P54 (50/40ºC)		Ventilation power 230V~50Hz	Ventilation current 230V~50Hz	Noise level (5 m)	Weight
		Water heating capacity	Water pressure drop	Water heating capacity	Water pressure drop	Water heating capacity	Water pressure drop				
	m³/h	kW	Pa	kW	Pa	kW	Pa	kW	A	dB(A)	kg
ROTO SB 1000 P	2910	15,58	8280	12,44	8640	14,47	9820	0,523	3,8	62	-
ROTO SB 1500 P	3880	19,71	630	18,55	5840	21,19	12380	0,697	5,07	63	-
ROTO SB 2000 P	5820	31	1860	25,84	4580	30,77	10270	1,046	7,61	64	-
ROTO SB 2500 P	6790	38,97	3440	31,79	7160	36,94	9570	1,22	8,87	65	-
ROTO BB 1000 P	3750	18,21	15190	15,16	16190	16,48	12180	0,873	3,87	65	-
ROTO BB 1500 P	5000	23,52	1200	21,87	10990	24,15	15260	1,164	5,16	66	-
ROTO BB 2000 P	7500	36,57	3470	31,13	7350	35,04	12680	1,746	7,74	67	-
ROTO BB 2500 P	8750	45,78	6370	38,96	13420	42,12	11880	2,037	9,03	68	-

Water heated:
P86, P64 2x1", P54 1500-2000 2x1" and 2500 2x1¼".
Connection pipes P86, P64 and P54 are male.
P86 2 rows coil, P64 3 rows coil, P54 4 rows coil.

Selection program

Installation configurations

Standard: Above the door

Mounted installation

Hanging installation

Inverted: False ceiling mounting

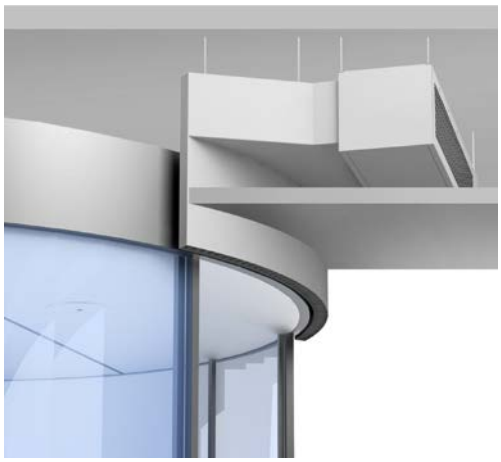

Dimensions

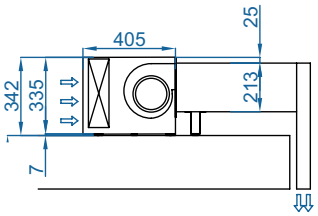

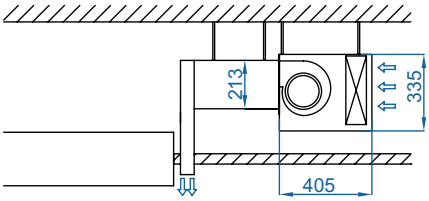

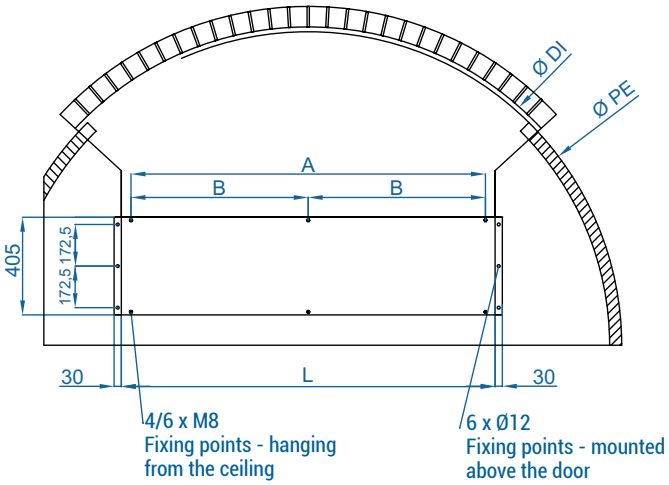

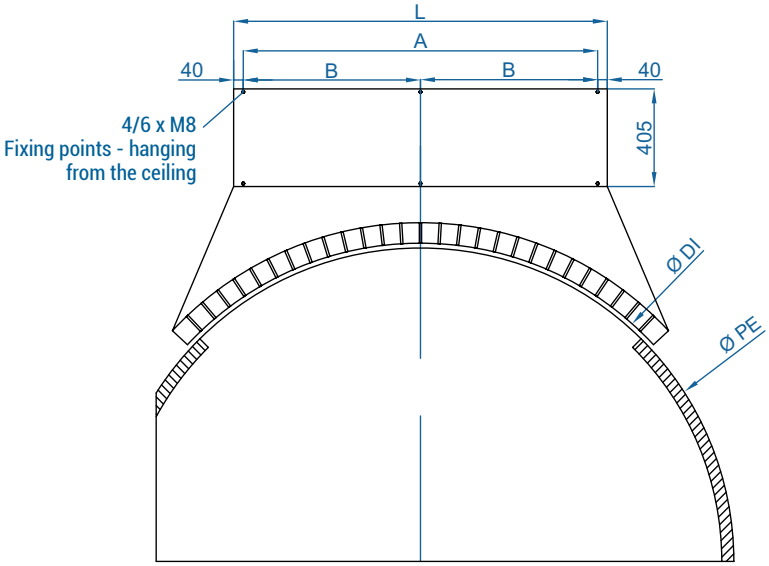

	L	I	A
ROTO SB-BB 1000	1050	970	-
ROTO SB-BB 1500	1550	1470	735
ROTO SB-BB 2000	2055	1975	987,5
ROTO SB-BB 2500	2555	2475	1237,5

Customizable dimensions on request.

Ø DI	Inside Outlet Diameter
Ø PE	External Door Diameter

Tailor made finishes

ROTOWIND can be customized in the same color or material as the revolving door to match the interior or exterior aesthetics of the building. Optionally, it can be ordered with a front decorative cover, which can be painted in a different color or finish. It can also be customized with logos, graphics or signage.
Multiple options available for accessories and supports to adapt to the installation requirements.

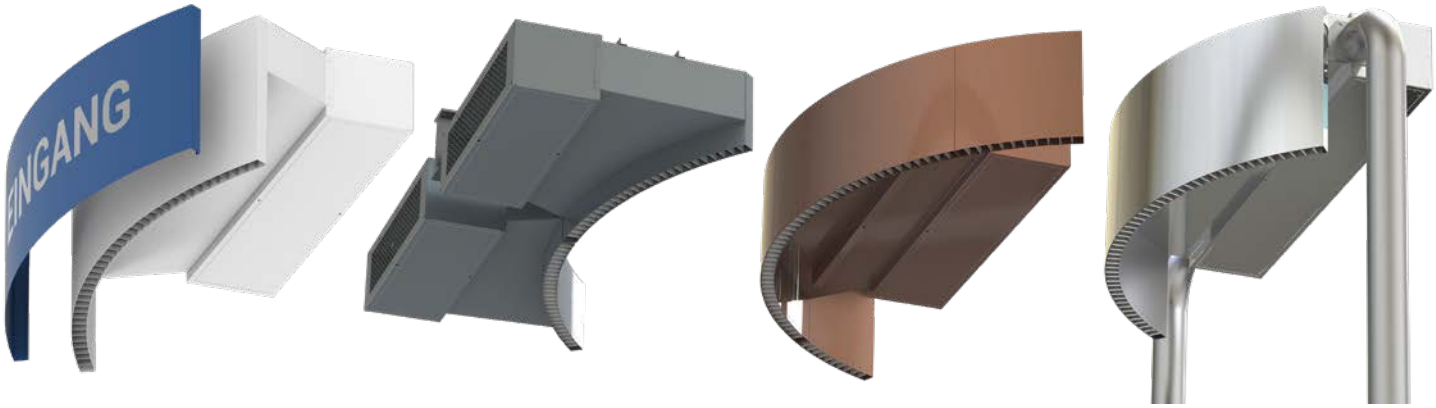

Optional acessories

Supports and installation

Decorative front cover (RAL Painted / SS)

Support angle (top mounting)
✔ Included

Silentblock support (top mounting)
✔ Included

Silentblock supports SPANG-SIL / SLB

Suspension cables SPCT

Round arm

Control

ADVANCED PRO
✔ Included

IR Control
✔ Included

RJ11 Cable
✔ Included

CLEVER PRO

Filters

Removable prefilter G2

Sensors and valves

Magnetic door contact MAG-DC
✔ Included

Mechanical door contact MEG-DC

External Temperature Sensor

Solenoid valve V-S

Valve 3 ways V-T

Proportional valve V-ACT

Technical Features

RAL 9016 standard

Other colors on request

Stainless steel

Maximum range
SB : 5 m BB : 7 m

Airflow / Length
3060 - 10720 m³/h
1 m to 3 m

Fans
Centrifugal
5-speed

Heating type
A : unheated

Heating capacity
-

Control
Plug&Play Advanced PRO
+ IR remote control
(Optional Clever Control)

Casing [**]
Galvanised steel

Inlet grille
Circular perforated

Outlet lamellas
Aluminium, airfoil type
Adjustable 0-15º each side

[*] Customizable dimensions on request

KOOL SB-BB is a commercial size air curtain with a power equivalent to an industrial unit, with an elegant and timeless design.

This model works with the latest generation of double-inlet centrifugal high efficiency EC fans driven by an external rotor motor, with low noise level and very low consumption. With a large perforated inlet grille avoiding intensive maintenance.

Advanced Plug&Play control. Includes: Advanced PRO control with LCD display and integrated thermostat, door contact, 7m RJ11 cable and remote control. Optional: intelligent Clever PRO Control (automatic, programmable, modbus for PLC, timer, etc).

UNHEATED

Model	Airflow	Ventilation power 230V~50Hz	Ventilation current 230V~50Hz	Noise level (5 m)	Weight
	m³/h	kW	A	dB (A)	kg
KSB 1000 A	3060	0,523	3,8	62	37
KSB 1500 A	4080	0,697	5,07	63	54
KSB 2000 A	6120	1,046	7,61	64	75
KSB 2500 A	7140	1,22	8,87	65	91
KSB 3000 A	8160	1,395	10,14	66	107
KBB 1000 A	4020	0,873	3,87	66	38
KBB 1500 A	5360	1,164	5,16	67	55
KBB 2000 A	8040	1,746	7,74	68	77
KBB 2500 A	9380	2,037	9,03	69	93
KBB 3000 A	10720	2,328	10,32	70	110

Selection program

Dimensions

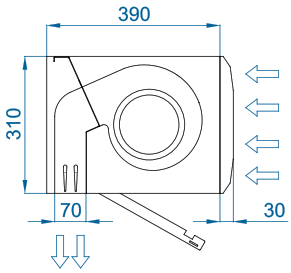

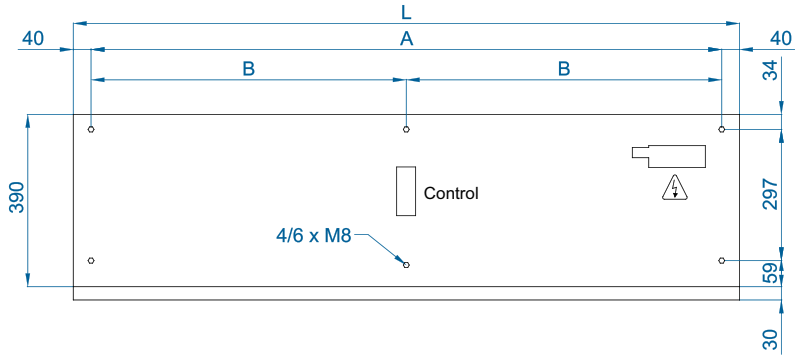

L	A	B
1000	920	-
1500	1420	710
2000	1920	960
2500	2420	1210
3000	2920	1460

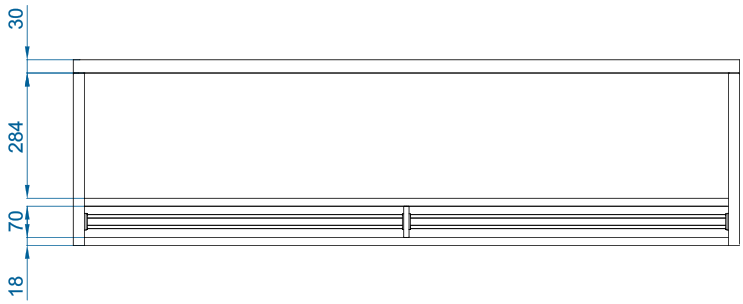

Optional accessories

Supports

Wall rail support
SPWR

Silentblock supports
SPANG-SIL / SLB

Suspension cables
SPCT

Foot support
SPF-KOOL BB
(Galv. / SS)

Joining kit
SPJ-KOOL BB
(Galv. / SS)

Control

ADVANCED PRO
✔ Included

IR Control
✔ Included

RJ11 Cable
✔ Included

CLEVER PRO

Sensors

Mechanical door contact
MEC-DC

Magnetical door contact
MAG-DC
✔ Included

External Temperature
Sensor

CAD drawings, BIM files, installation manuals and other documentation

CAD BIM

Technical Features

RAL 9016 standard

Stainless steel

Other colors on request

Maximum range
L : 5m LT : 6m
XL : 7 m XLT : 8 m

Airflow / Length
3800 - 17400 m³/h
1 m to 3 m

Fans
Centrifugal
5-speed

Heating types
E : electrical 3 stages
P : water
A : unheated
DX : heat pump [*]

Heating capacity
E : 6 -80 kW
P : 16,2 - 85,3 kW

Control
Plug&Play Advanced PRO
+ IR remote control
(Optional Clever Control)

Casing
Galvanised Steel

Grille type [**]
Industrial (standard)
Decorative (optional)

Outlet lamellas
Aluminium, airfoil type
Adjustable 0-15º each side

[*] Consult separate DX catalogs.

[**] Two front inlet grille options: industrial perforated by default (free of maintenance) or micro-perforated decorative with prefilter function.

WINDBOX L,XL has been designed to create a high effective air barrier for doors up to 8 meters high, maintaining internal conditions and reducing energy losses. A highly powerful and robust industrial air curtain model for large dimension doors, ready for visible installation over the door and prepared for multiple false ceiling installation configurations.

This air curtain model works with double-inlet centrifugal fans driven by an external rotor motor and low noise level.

Advanced Plug&Play control. Includes: Advanced PRO control with LCD display and integrated thermostat, door contact, 10m RJ11 cable and remote control. Optional: intelligent Clever PRO Control (automatic, programmable, modbus for PLC, timer, etc).

UNHEATED - 230Vx1

Model	Airflow	Ventilation power 230V~50Hz	Ventilation current 230V~50Hz	Noise level (5 m)	Weight
	m³/h	kW	A	dB(A)	kg
L 1000 A	4000	1,04	4,4	63	72
L 1500 A	6000	1,56	6,6	64	108
L 2000 A	8000	2,08	8,8	65	145
L 2500 A	10000	2,60	11,0	66	177
L 3000 A	12000	3,12	13,2	67	213
XL 1000 A	5300	1,40	6,0	65	78
XL 1500 A	7950	2,10	9,0	66	117
XL 2000 A	10600	2,80	12,0	67	157
XL 2500 A	13250	3,50	15,0	68	192
XL 3000 A	15900	4,20	18,0	69	231

UNHEATED - 400Vx3

Model	Airflow	Ventilation power 400Vx3~50Hz	Ventilation current 400Vx3~50Hz	Noise level (5 m)	Weight
	m³/h	kW	A	dB(A)	kg
L 1000 A - 400Vx3	4260	1,2	2,6	63	72
L 1500 A - 400Vx3	6400	1,8	3,9	64	108
L 2000 A - 400Vx3	8660	2,4	5,2	65	145
L 2500 A - 400Vx3	10650	3,0	6,5	66	177
L 3000 A - 400Vx3	12780	3,6	7,8	67	213
XL 1000 A - 400Vx3	5800	1,76	3,2	65	78
XL 1500 A - 400Vx3	8700	2,64	4,8	66	117
XL 2000 A - 400Vx3	11600	3,52	6,4	67	157
XL 2500 A - 400Vx3	14500	4,40	8,0	68	192
XL 3000 A - 400Vx3	17400	5,28	9,6	69	231

ELECTRIC HEATED

Model	Airflow	Electrical heating capacity 400Vx3~50Hz (*)	Ventilation power 230V~50Hz	Ventilation current 230V~50Hz	Noise level (5 m)	Weight
	m³/h	kW	kW	A	dB(A)	kg
L 1000 E	4000	6/13/19	1,04	4,4	63	90
L 1000 E-25	4000	10/15/25	1,04	4,4	63	90
L 1500 E	6000	8/22,5/30,5	1,56	6,6	64	135
L 1500 E-37,5	6000	15/22,5/37,5 (**)	1,56	6,6	64	135
L 2000 E	8000	12/30/42 (**)	2,08	8,8	65	180
L 2000 E-50	8000	20/30/50 (**)	2,08	8,8	65	180
L 2500 E	10000	20/30/50 (**)	2,60	11,0	66	225
L 2500 E-60	10000	20/40/60 (***)	2,60	11,0	66	225
L 3000 E	12000	20/40/60 (***)	3,12	13,2	67	270
L 3000 E-70	12000	20/50/70 (***)	3,12	13,2	67	270
XL 1000 E	5300	10/15/25	1,40	6,0	65	95
XL 1000 E-35	5300	10/25/35 (**)	1,40	6,0	65	96
XL 1500 E	7950	15/22,5/37,5 (**)	2,10	9,0	66	144
XL 1500 E-52	7950	15/37,5/52,5 (**)	2,10	9,0	66	150
XL 2000 E	10600	20/30/50 (**)	2,80	12,0	67	192
XL 2000 E-70	10600	20/50/70 (***)	2,80	12,0	67	200
XL 2500 E	13250	20/40/60 (***)	3,50	15,0	68	240
XL 2500 E-70	13250	20/50/70 (***)	3,50	15,0	68	250
XL 3000 E	15900	20/50/70 (***)	4,20	18,0	69	268
XL 3000 E-80	15900	30/50/80 (***)	4,20	18,0	69	300

(*) Under request other electrical heating power can be limited.

(**) 2 separated power supplies.

(***) 3 separated power supplies.

WATER HEATED - 230Vx1

Model	Airflow	P86 (80/60ºC)		P64 (60/40ºC)		P54 (50/40ºC)		Ventilation power 230V~50Hz	Ventilation current 230V~50Hz	Noise level (5 m)	Weight
		Water heating capacity	Water pressure drop	Water heating capacity	Water pressure drop	Water heating capacity	Water pressure drop				
	m³/h	kW	Pa	kW	Pa	kW	Pa	kW	A	dB(A)	kg
L 1000 P	3800	19,68	1730	16,18	2570	17,18	1560	1,04	4,4	62	89
L 1500 P	5700	29,64	950	25,92	3210	29,04	5710	1,56	6,6	63	128
L 2000 P	7600	43,01	2390	35,58	3680	38,93	4330	2,08	8,8	64	171
L 2500 P	9500	56,01	4670	45,55	4750	49,36	4990	2,60	11,0	65	214
L 3000 P	11400	69,27	8090	56,78	8350	59,96	5770	3,12	13,2	66	260
XL 1000 P	4900	22,68	2250	18,98	3410	20,43	2120	1,40	6,0	64	94
XL 1500 P	7350	34,52	1240	30,45	4270	34,55	7780	2,10	9,0	65	137
XL 2000 P	9800	50,10	3140	41,83	4910	46,36	5910	2,80	12,0	66	183
XL 2500 P	12250	65,29	6130	53,56	6330	58,81	6810	3,50	15,0	67	227
XL 3000 P	14700	80,79	10640	66,78	11140	71,47	7890	4,20	18,0	68	278

WATER HEATED - 400Vx3

Model	Airflow	P86 (80/60ºC)		P64 (60/40ºC)		P54 (50/40ºC)		Ventilation power 400Vx3 ~50Hz	Ventilation current 400Vx3 ~50Hz	Noise level (5 m)	Weight
		Water heating capacity	Water pressure drop	Water heating capacity	Water pressure drop	Water heating capacity	Water pressure drop				
	m³/h	kW	Pa	kW	Pa	kW	Pa	kW	A	dB(A)	kg
L 1000 P - 400Vx3	4050	20,45	1850	16,86	2760	17,96	1690	1,20	2,6	62	89
L 1500 P - 400Vx3	6075	31,23	1090	27,01	3460	30,36	6180	1,80	3,9	63	128
L 2000 P - 400Vx3	8100	44,72	2560	37,09	3960	40,71	4690	2,40	5,2	64	171
L 2500 P - 400Vx3	10125	58,25	5010	47,47	5110	51,62	5400	3,00	6,5	65	214
L 3000 P - 400Vx3	12150	72,04	8670	59,19	8990	62,72	6250	3,60	7,8	66	260
XL 1000 P - 400Vx3	5365	24,09	2470	20,07	3760	21,69	2360	1,76	3,2	64	94
XL 1500 P - 400Vx3	8050	36,41	1370	32,22	4720	36,72	8670	2,64	4,8	65	137
XL 2000 P - 400Vx3	10730	52,85	3450	44,26	5420	49,28	6590	3,52	6,4	66	183
XL 2500 P - 400Vx3	13415	68,89	6750	56,68	7000	61,53	7590	4,40	8,0	67	227
XL 3000 P - 400Vx3	16095	85,26	11700	70,68	12310	76,01	8800	5,28	9,6	68	278

Water heated:
2x1" for 1000 and 1500, 2x1¼" for 2000 and 2500, 2x1½" for 3000.
Connection pipes P86, P64 and P54 are female (male if lateral pipes).
P86 2 rows coil, P64 3 rows coil, P54 4 rows coil.

Selection program

Dimensions

Horizontal installation

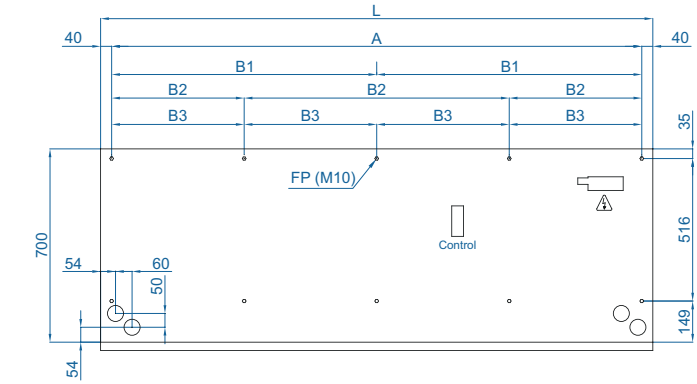

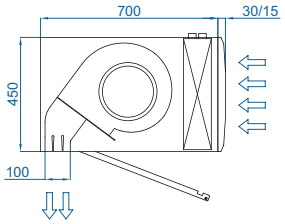

L	A	B1	B2	B3	FP
1000	920	-	-	-	4
1500	1420	710	-	-	6
2000	1920	960	-	-	6
2500	2420	-	806,7	-	8
3000	2920	-	-	730	10

Vertical installation

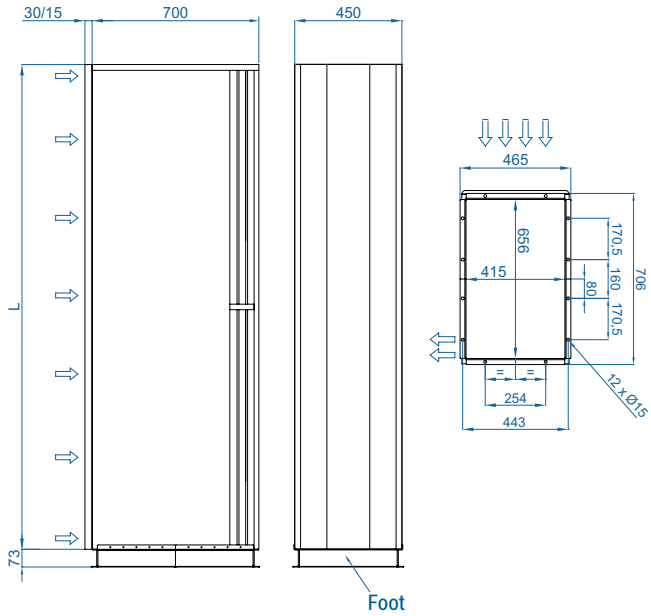

Inside ceiling surface mounting

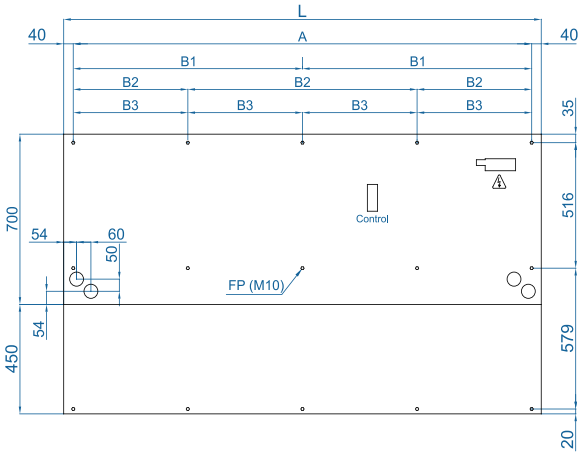

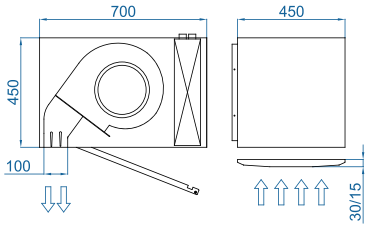

L	A	B1	B2	B3	FP
1000	920	-	-	-	4+2
1500	1420	710	-	-	6+3
2000	1920	960	-	-	6+3
2500	2420	-	806,7	-	8+4
3000	2920	-	-	730	10+5

False ceiling invisible mounting

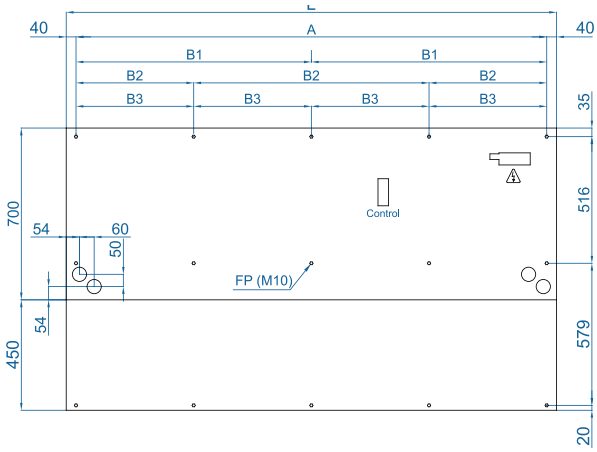

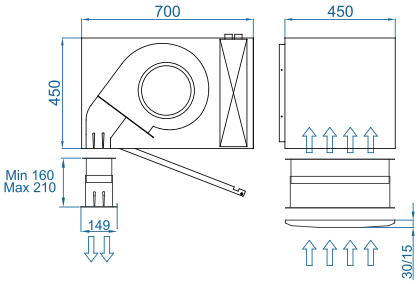

CAD drawings, BIM files, installation manuals and other documentation

CAD BIM

Installation Configurations

Free hanging mounting

With outlet kit

With inlet kit

With plenum

With plenum and kits

With INS outlet kit

Optional Accessories

Inlet Grille

Industrial Grille (Perforated)
✔ Included

Decorative Grille (Micro-perforated)

Supports and installation

Wall rail support SPWR

Silentblock supports SPANG-SIL / SLB

Suspension cables SPCT

Foot support SPF-LXL (Galv. / SS)

Joining kit SPJ-LXL (Galv. / SS)

Kit INS (Galv. / SS)

Control

ADVANCED PRO
✔ Included

IR Control
✔ Included

RJ11 Cable
✔ Included

CLEVER PRO

Filters

Removable prefilter G2

Sensors and valves

Magnetic door contact MAG-DC
✔ Included

Mechanical door contact MEC-DC

External Temperature Sensor

Solenoid valve V-S

Valve 3 ways V-T

Proportional valve V-ACT

Technical Features

Casing: Black forge (standard)

Panels: Anodized aluminium (standard)

Panels: Stainless Steel (optional)

Other colors and materials on request

Maximum range

L : 5m LT : 6m
XL : 7 m XLT : 8 m

Airflow / Length

3800 - 13250 m³/h
1 m to 2,5 m

Fans

Centrifugal
5-speed

Heating types

E : electrical 3 stages
P : water
A : unheated
DX : heat pump [*]

Heating capacity

E : 10 -70 kW
P : 16,2 - 65,3 kW

Control

Plug&Play Advanced PRO
+ IR remote control
(Optional Clever Control)

Casing

Galvanised Steel

Grille type

Rectangular perforated

Outlet lamellas

Aluminium, airfoil type
Adjustable 0-15º each side

[*] Consult separate DX catalogs

Decorative, minimalist and elegant, ZEN air curtain makes it the favorite of architects and designers to include in their projects.
ZEN L,XL air curtain has the same aesthetic as the MG model, but with the power and dimensions of an industrial unit.

Its smart design and high performance is perfect to blend with any building's internal or external aesthetics. Apart from seamlessly integrating into any space, ZEN can become an active part of the decor and ambience of the premises offering more features than a standard air curtain.

ZEN air curtain offers infinite possibilities of customization. Central casing made of galvanized steel finished in black forge as standard. Front anodized aluminium panels, optionally manufactured in brushed or mirror polished stainless steel. Other materials are possible, such as wood, metal, etc.
Other colours are available on request. Special finishes with other materials such as aged metal, wood, glass, PVC / PES, logos, signage, graphics, lights, clocks, vinyl or slogans.

This air curtain model works with double-inlet centrifugal fans driven by an external rotor motor with low noise level.

Advanced Plug&Play control. Includes: Advanced PRO control with LCD display and integrated thermostat, door contact, 10m RJ11 cable and remote control. Optional: intelligent Clever PRO Control (automatic, programmable, modbus for PLC, timer, etc).

UNHEATED

Model	Airflow	Ventilation power 230V~50Hz	Ventilation current 230V~50Hz	Noise level (5 m)	Weight
	m³/h	kW	A	dB(A)	kg
ZEN L 1000 A	4000	1,04	4,4	63	72
ZEN L 1500 A	6000	1,56	6,6	64	108
ZEN L 2000 A	8000	2,08	8,8	65	145
ZEN L 2500 A	10000	2,60	11,0	66	177
ZEN XL 1000 A	5300	1,40	6,0	65	78
ZEN XL 1500 A	7950	2,10	9,0	66	117
ZEN XL 2000 A	10600	2,80	12,0	67	157
ZEN XL 2500 A	13250	3,50	15,0	68	192

ELECTRIC HEATED

Model	Airflow	Electrical heating capacity 400Vx3~50Hz (*)	Ventilation power 230V~50Hz	Ventilation current 230V~50Hz	Noise level (5 m)	Weight
	m³/h	kW	kW	A	dB(A)	kg
ZEN L 1000 E	4000	6/13/19	1,04	4,4	63	90
ZEN L 1000 E-25	4000	10/15/25	1,04	4,4	63	90
ZEN L 1500 E	6000	8/22,5/30,5	1,56	6,6	64	135
ZEN L 1500 E-37,5	6000	15/22,5/37,5 (**)	1,56	6,6	64	135
ZEN L 2000 E	8000	12/30/42 (**)	2,08	8,8	65	180
ZEN L 2000 E-50	8000	20/30/50 (**)	2,08	8,8	65	180
ZEN L 2500 E	10000	20/30/50 (**)	2,60	11,0	66	225
ZEN L 2500 E-60	10000	20/40/60 (***)	2,60	11,0	66	225
ZEN XL 1000 E	5300	10/15/25	1,40	6,0	65	95
ZEN XL 1000 E-35	5300	10/25/35 (**)	1,40	6,0	65	96
ZEN XL 1500 E	7950	15/22,5/37,5 (**)	2,10	9,0	66	144
ZEN XL 1500 E-52	7950	15/37,5/52,5 (**)	2,10	9,0	66	150
ZEN XL 2000 E	10600	20/30/50 (**)	2,80	12,0	67	192
ZEN XL 2000 E-70	10600	20/50/70 (***)	2,80	12,0	67	200
ZEN XL 2500 E	13250	20/40/60 (***)	3,50	15,0	68	240
ZEN XL 2500 E-70	13250	20/50/70 (***)	3,50	15,0	68	250

(*) Under request other electrical heating power can be limited.

(**) 2 separated power supplies.

(***) 3 separated power supplies.

WATER HEATED

Model	Airflow	P86 (80/60ºC)		P64 (60/40ºC)		P54 (50/40ºC)		Ventilation power 230V~50Hz	Ventilation current 230V~50Hz	Noise level (5 m)	Weight
		Water heating capacity	Water pressure drop	Water heating capacity	Water pressure drop	Water heating capacity	Water pressure drop				
	m³/h	kW	Pa	kW	Pa	kW	Pa	kW	A	dB(A)	kg
ZEN L 1000 P	3800	19,68	1730	16,18	2570	17,18	1560	1,04	4,4	62	89
ZEN L 1500 P	5700	29,64	950	25,92	3210	29,04	5710	1,56	6,6	63	128
ZEN L 2000 P	7600	43,01	2390	35,58	3680	38,93	4330	2,08	8,8	64	171
ZEN L 2500 P	9500	56,01	4670	45,55	4750	49,36	4990	2,60	11,0	65	214
ZEN XL 1000 P	4900	22,68	2250	18,98	3410	20,43	2120	1,40	6,0	64	94
ZEN XL 1500 P	7350	34,52	1240	30,45	4270	34,55	7780	2,10	9,0	65	137
ZEN XL 2000 P	9800	50,10	3140	41,83	4910	46,36	5910	2,80	12,0	66	183
ZEN XL 2500 P	12250	65,29	6130	53,56	6330	58,81	6810	3,50	15,0	67	227

Water heated:
2x1" for 1000 and 1500, 2x1¼" for 2000 and 2500
Connection pipes P86, P64 and P54 are female (male if lateral pipes).
P86 2 rows coil, P64 3 rows coil, P54 4 rows coil.

Selection program

Dimensions

Horizontal Installation

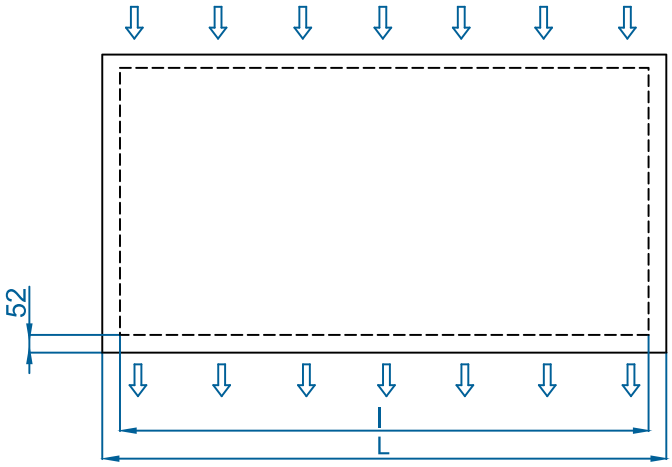

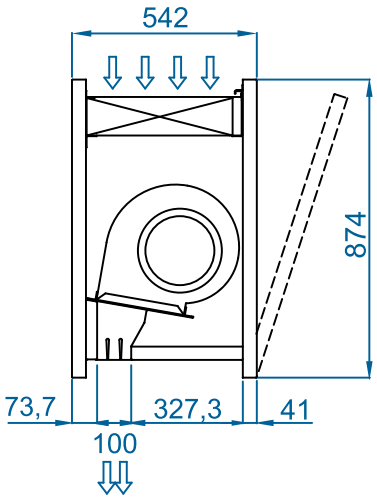

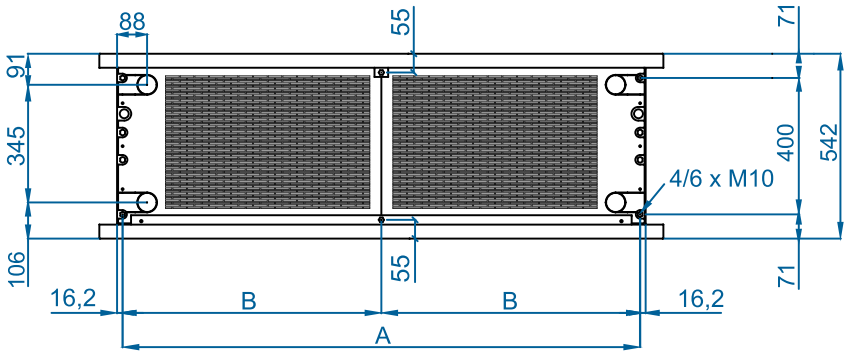

	L	I	A	B
ZEN LXL 1000	1220	1140	1115	-
ZEN LXL 1500	1620	1544	1515	757,5
ZEN LXL 2000	2120	2044	2015	1007,5
ZEN LXL 2500	2620	2544	2515	1257,5

Customizable dimensions on request.

CAD drawings, BIM files, installation manuals and other documentation

CAD BIM

Finishes

The front panel is designed to include graphics, logos, illuminated signs, signage, clocks or any other decorative element desired by the customer. Available in any colour from the RAL chart or in stainless steel.

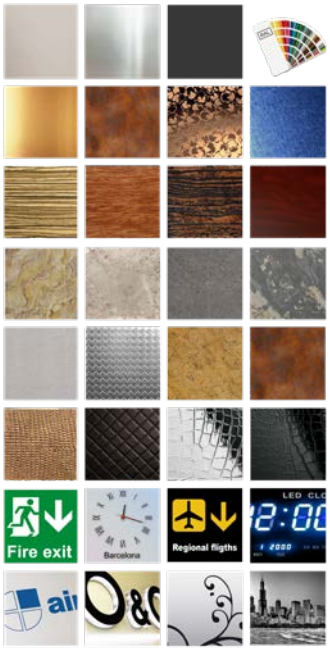

standard / painted

decorative metals

wood

stone

industrial

leather

signage

logos / images

WATCH VIDEO

SEE FINISHES CATALOGUE

Optional accessories

Supports and installation

Wall rail support
SPWR

Silentblock supports
SPANG-SIL / SLB

Suspension cables
SPCT

Control

ADVANCED PRO
✔ Included

IR Control
✔ Included

RJ11 Cable
✔ Included

CLEVER PRO

Filters

Removable prefilter G2

Sensors and valves

Magnetic door contact
MAG-DC
✔ Included

Mechanical door contact
MEC-DC

External Temperature Sensor

Solenoid valve
V-S

Valve 3 ways
V-T

Proportional valve
V-ACT

Technical Features

RAL 9016 standard

Other colors on request

Maximum range
AC : 6 m EC : 8 m

Airflow / Length
6400 - 20800 m³/h
1,5 m to 3,5 m

Fans
Axial
(Optional Atex) [*]

Heating types
E : electrical 3 stages
P : water
A : unheated

Heating capacity
E : 15 - 90 kW
P : 34,1 - 131,4 kW

Control
Without regulation. Optional:
(Advanced PRO + IR control)
(Clever PRO Control)

Casing
Galvanised Steel

Grille type
-

Outlet lamellas
Aluminium, airfoil type
Adjustable 0-15º each side

MAXWELL high performance air curtains for large industrial doors in industrial buildings, factories, loading bays, hangars or railway stations.
For vertical or horizontal installation, they can be easily coupled together as dockable modules to reach large dimensions.
Available in 1.5, 2.0, 2.5, 3.0 and 3.5 meters length.

With its double air discharge jet with Coanda effect they achieve longer distances more efficiently.

High efficiency and low noise axial fans, driven with external rotor motor single phase 230V. Optionally three phase 400V. Maintenance free.

Regulation not included. Optional: Advanced PRO control with LCD display and integrated thermostat, door contact, 10m RJ11 cable and remote control.
Intelligent Clever PRO Control (automatic, programmable, modbus for PLC, timer, etc).

[*] Atex Fans: Optional high efficiency and low noise explosion proof axial fans Atex II 3G Ex h IIB T3 Gc X, driven with external rotor motor three phase 400V.
"A" type without heating, air only. "P" type with water heated.

UNHEATED - 230Vx1

Model	Airflow	Ventilation power 230V~50Hz	Ventilation current 230V~50Hz	Noise level (5 m)	Weight
	m³/h	kW	A	dB(A)	kg
MXW 1500 A	7000	0,68	2,96	60	79
MXW 2000 A	10500	1,02	4,44	61	103
MXW 2500 A	14000	1,36	5,92	62	126
MXW 3000 A	17500	1,70	7,40	63	150
MXW 3500 A	20800	2,04	8,88	64	173

UNHEATED - 400Vx3

Model	Airflow	Ventilation power 400Vx3~50Hz	Ventilation current 400Vx3~50Hz	Noise level (5 m)	Weight
	m³/h	kW	A	dB(A)	kg
MXW 1500 A 400Vx3	7000	0,66	1,32	60	79
MXW 2000 A 400Vx3	10500	0,99	1,98	61	103
MXW 2500 A 400Vx3	14000	1,32	2,64	62	126
MXW 3000 A 400Vx3	17500	1,65	3,30	63	150
MXW 3500 A 400Vx3	20800	1,98	3,96	64	173

UNHEATED - EC Fans

Model	Airflow	Ventilation Power 230V~50Hz	Ventilation Current 230V~50Hz	Noise Level (5 m)	Weight
	m³/h	kW	A	dB(A)	kg
MXW EC 1500 A	9200	0,99	4,4	63	83
MXW EC 2000 A	13800	1,485	6,6	64	109
MXW EC 2500 A	18400	1,98	8,8	65	134
MXW EC 3000 A	23000	2,475	11	66	160
MXW EC 3500 A	27600	2,97	13,2	67	185

UNHEATED - ATEX Fans

Model	Airflow	Ventilation power 400Vx3~50Hz	Ventilation current 400Vx3~50Hz	Noise level (5 m)	Weight
	m³/h	kW	A	dB(A)	kg
MXW 1500 A EX-Fans	6400	0,64	1,50	60	79
MXW 2000 A EX-Fans	9600	0,96	2,25	61	103
MXW 2500 A EX-Fans	12800	1,28	3,00	62	126
MXW 3000 A EX-Fans	16000	1,60	3,75	63	150
MXW 3500 A EX-Fans	19200	1,92	4,50	64	173

ELECTRIC HEATED - Fan power supply 230Vx1

Model	Airflow	Electrical heating capacity 400Vx3~50Hz (*)	Ventilation power 230Vx1~50Hz	Ventilation current 230Vx1~50Hz	Noise level (5 m)	Weight
	m³/h	kW	kW	A	dB(A)	kg
MXW 1500 E	7000	15/22,5/37,5 (**)	0,68	2,96	60	96
MXW 2000 E	10500	20/30/50 (**)	1,02	4,44	61	133
MXW 2500 E	14000	30/40/70 (***)	1,36	5,92	62	167
MXW 3000 E	17500	30/50/80 (***)	1,70	7,40	63	201
MXW 3500 E	20800	30/60/90 (****)	2,04	8,88	64	231

ELECTRIC HEATED - Fan power supply 400Vx3

Model	Airflow	Electrical heating capacity 400Vx3~50Hz (*)	Ventilation power 400Vx3~50Hz	Ventilation current 400Vx3~50Hz	Noise level (5 m)	Weight
	m³/h	kW	kW	A	dB(A)	kg
MXW 1500 E 400Vx3	7000	15/22,5/37,5 (**)	0,66	1,32	60	96
MXW 2000 E 400Vx3	10500	20/30/50 (**)	0,99	1,98	61	133
MXW 2500 E 400Vx3	14000	30/40/70 (***)	1,32	2,64	62	167
MXW 3000 E 400Vx3	17500	30/50/80 (***)	1,65	3,30	63	201
MXW 3500 E 400Vx3	20800	30/60/90 (****)	1,98	3,96	64	231

(*) Under request other electrical heating power can be limited.

(**) 2 separated power supplies.

(***) 3 separated power supplies.

(***) The electrical 3500 heater incorporates the bars of length 3000 model.

Back to index

ELECTRIC HEATED - EC Fans

Model	Airflow	Electrical heating capacity 400Vx3~50Hz (*)	Ventilation Power 230V~50Hz	Ventilation Current 230V~50Hz	Noise Level (5 m)	Weight
	m³/h	kW	kW	A	dB(A)	kg
MXW EC 1500 E	9200	15/22,5/37,5 (**)	0,99	4,4	63	96
MXW EC 2000 E	13800	20/30/50 (**)	1,485	6,6	64	133
MXW EC 2500 E	18400	30/40/70 (***)	1,98	8,8	65	167
MXW EC 3000 E	23000	30/50/80 (***)	2,475	11	66	201
MXW EC 3500 E	27600	30/60/90 (****)	2,97	13,2	67	233

(*) Under request other electrical heating power can be limited.

(**) 2 separated power supplies.

(***) 3 separated power supplies.

(***) The electrical 3500 heater incorporates the bars of length 3000 model.

WATER HEATED - 230Vx1

Model	Airflow	P86 (80/60ºC)		P64 (60/40ºC)		Ventilation power 230V~50Hz	Ventilation current 230V~50Hz	Noise level (5 m)	Weight
		Water heating capacity	Water pressure drop	Water heating capacity	Water pressure drop				
	m³/h	kW	Pa	kW	Pa	kW	A	dB(A)	kg
MXW 1500 P	6800	40,69	10150	34,09	12620	0,68	2,96	59	95
MXW 2000 P	10200	56,29	2180	50,16	13660	1,02	4,44	60	126
MXW 2500 P	13600	76,97	4730	66,19	14600	1,36	5,92	61	158
MXW 3000 P	17000	97,77	8640	82,22	14560	1,70	7,40	62	189
MXW 3500 P	20300	118,28	140080	97,92	14910	2,04	8,88	63	221

WATER HEATED - 400Vx3

Model	Airflow	P86 (80/60ºC)		P64 (60/40ºC)		Ventilation power 400Vx3~50Hz	Ventilation current 400Vx3~50Hz	Noise level (5 m)	Weight
		Water heating capacity	Water pressure drop	Water heating capacity	Water pressure drop				
	m³/h	kW	Pa	kW	Pa	kW	A	dB(A)	kg
MXW 1500 P 400Vx3	6800	40,69	10150	34,09	12620	0,66	1,32	59	95
MXW 2000 P 400Vx3	10200	56,29	2180	50,16	13660	0,99	1,98	60	126
MXW 2500 P 400Vx3	13600	76,97	4730	66,19	14600	1,32	2,64	61	158
MXW 3000 P 400Vx3	17000	97,77	8640	82,22	14560	1,65	3,30	62	189
MXW 3500 P 400Vx3	20300	118,28	140080	97,92	14910	1,98	3,96	63	221

WATER HEATED - EC Fans

Model	Airflow	P86 (80/60ºC)		P64 (60/40ºC)		Ventilation Power 230V~50Hz	Ventilation Current 230V~50Hz	Noise Level (5 m)	Weight
		Water Heating Capacity	Water Pressure Drop	Water Heating Capacity	Water Pressure Drop				
	m³/h	kW	Pa	kW	Pa	kW	A	dB(A)	kg
MXW EC 1500 P	8600	47,72	15490	39,6	16450	0,99	4,4	62	99
MXW EC 2000 P	12900	64,77	2800	58,2	17770	1,485	6,6	63	132
MXW EC 2500 P	17200	87,02	5880	75,36	18370	1,98	8,8	64	164
MXW EC 3000 P	21500	109,36	10540	92,53	17940	2,475	11	65	199
MXW EC 3500 P	25800	131,42	16970	110,14	18960	2,97	13,2	66	233

WATER HEATED - ATEX Fans

Model	Airflow	P86 (80/60ºC) Water heating capacity	P86 (80/60ºC) Water pressure drop	P64 (60/40ºC) Water heating capacity	P64 (60/40ºC) Water pressure drop	Ventilation power 400Vx3~50Hz	Ventilation current 400Vx3~50Hz	Noise level (5 m)	Weight
	m³/h	kW	Pa	kW	Pa	kW	A	dB(A)	kg
MXW 1500 P EX Fans	6400	39,88	11270	32,78	11780	0,74	2,24	59	95
MXW 2000 P EX Fans	9600	54,26	2040	47,74	11820	1,11	3,36	60	126
MXW 2500 P EX Fans	12800	74,21	4430	63,38	13630	1,48	4,48	61	158
MXW 3000 P EX Fans	16000	94,26	8100	79,11	13630	1,85	5,60	62	189
MXW 3500 P EX Fans	19200	114,35	13260	94,50	14000	2,22	6,72	63	221

Water heated:
P86 2 rows coil, P64 3 rows coil
2x1¼" for all models.
Connection pipes P86 and P64 are female (male if lateral pipes).

Selection program

Dimensions

Horizontal installation
Water heated / unheated

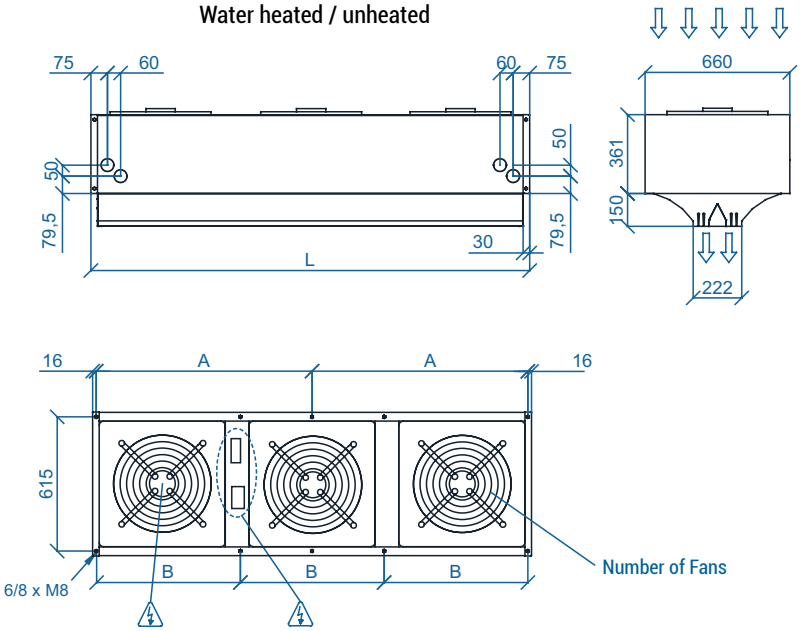

Vertical installation
Water heated / unheated

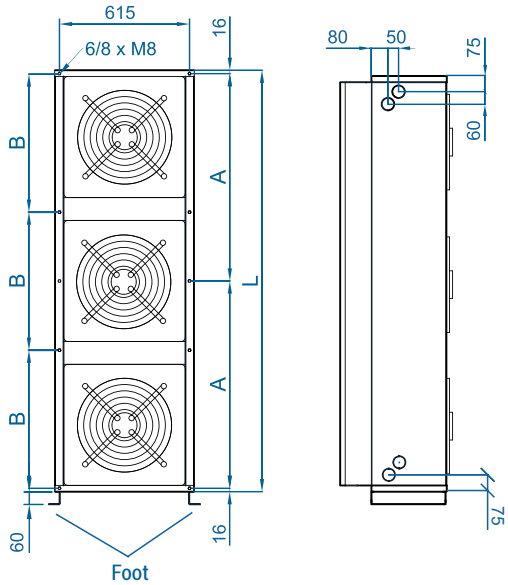

	L	A	B	Fans
MXW 1500	1500	734	-	2
MXW 2000	2000	984	-	3
MXW 2500	2500	1234	-	4
MXW 3000	3040	-	1002,5	5
MXW 3500	3620	-	1196	6

Horizontal installation
Electrical heated

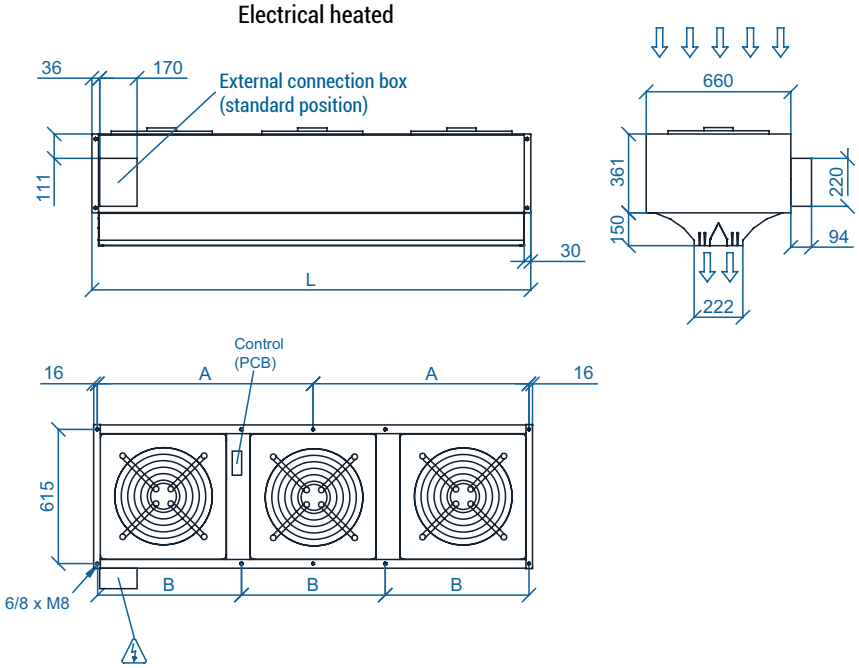

Vertical installation
Electrical heated

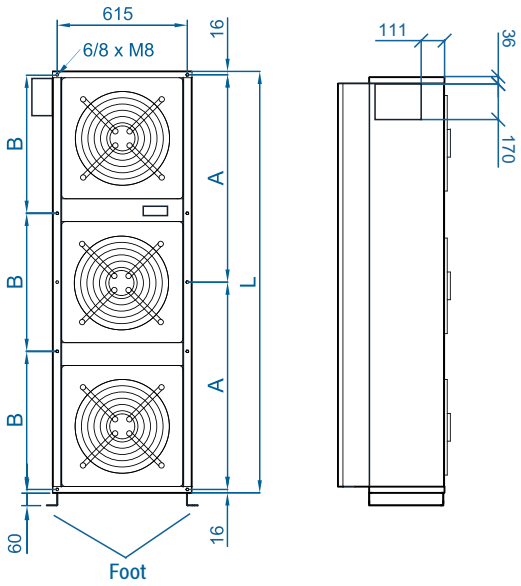

ATEX fans dimensions

Horizontal installation
Water heated / unheated

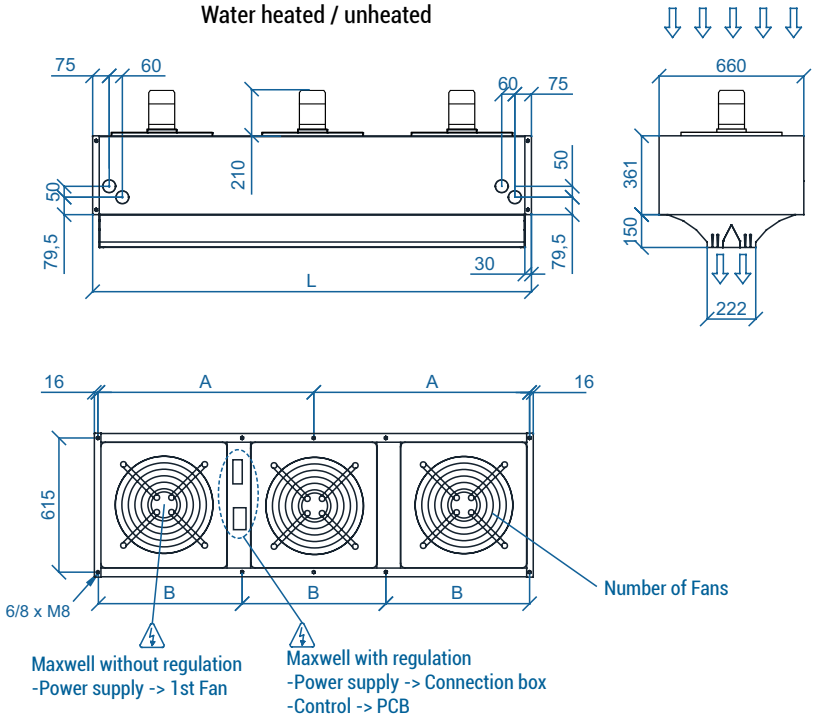

Vertical installation
Water heated / unheated

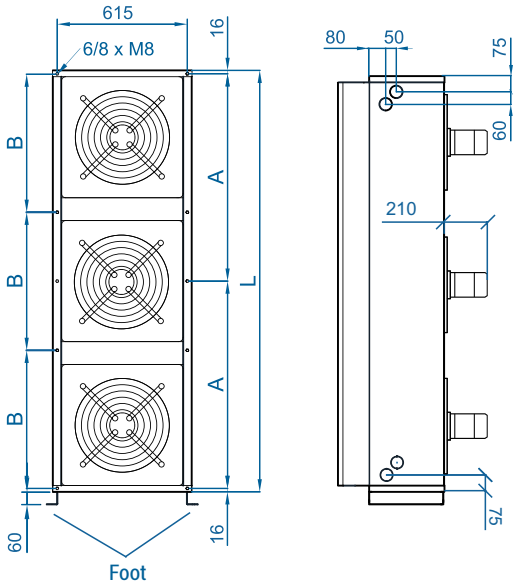

	L	A	B	Fans
MXW 1500	1500	734	-	2
MXW 2000	2000	984	-	3
MXW 2500	2500	1234	-	4
MXW 3000	3040	-	1002,5	5
MXW 3500	3620	-	1196	6

Coanda Effect

The main characteristic of MAXWELL air curtain outlet is its double blow-out jet with Coanda effect. This airflow distribution permits to achieve larger and more efficient air jet. Moreover, it is a compact and versatile air curtain, available in several lengths that can be easily combined to reach large dimensions.

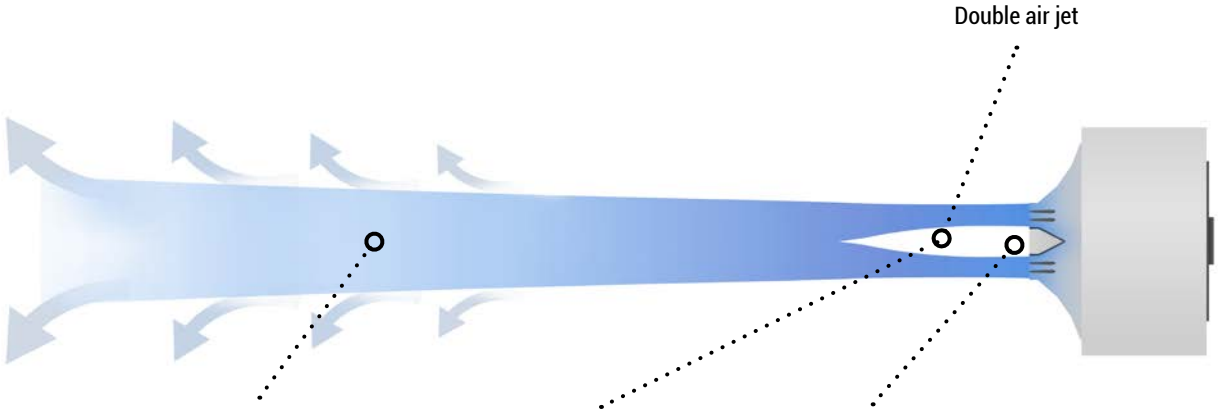

This airflow distribution permits to achieve larger, stronger, constant and more efficient air jet

The deflector accelerates the air speed and creates 2 air jets, contributing to origin the Coanda Effect

The deflector creates the air stream stagnation point, where the velocity becomes 0 and the kinetic energy is converted into pressure energy

Optional Accessories

Supports and installation

Wall rail support
SPWR

Silentblock supports
SPANG-SIL / SLB

Suspension cables
SPCT

Foot support
SPF-MXW
(Galv. / SS)

Joining kit
SPJ-MXW
(Galv. / SS)

Control

ADVANCED PRO

IR Control

RJ11 Cable

CLEVER PRO

Sensors and valves

Magnetic door contact
MAG-DC

Mechanical door contact
MEC-DC

External Temperature
Sensor

Solenoid valve
V-S

Valve 3 ways
V-T

Proportional valve
V-ACT

Power Coefficients

The technical data tables give the nominal heat capacity for warm water coils supplied with water at 80/60ºC, 60/40ºC and 50/40ºC with the air inlet temperature at 20ºC.

These tables supply the corresponding factors for calculating the heat capacity with different air and water inlet temperatures.

Water			Air Inlet Temperature		
Coil	Difference	Temperatures	15ºC	18ºC	20ºC
80/60 2 rows	20ºC	100/80	1,58	1,53	1,46
		90/70	1,35	1,27	1,22
		80/60	1,11	1,04	1,00
		70/50	0,89	0,82	0,78
		60/40	0,66	0,59	0,54
		55/35	0,54	0,47	0,42
	15ºC	100/85	1,72	1,64	1,59
		90/75	1,47	1,40	1,35
		80/65	1,22	1,14	1,09
		70/55	0,97	0,90	0,86
		60/45	0,73	0,66	0,61
		50/35	0,48	0,40	0,35
	10ºC	80/70	-	1,28	1,20
		70/60	1,09	1,02	0,97
		60/50	0,84	0,77	0,72
		50/40	0,59	0,52	0,48
		40/30	0,35	0,27	0,22
60/40 3 rows	20ºC	100/80	2,86	2,71	2,62
		90/70	2,45	2,30	2,21
		80/60	2,03	1,89	1,81
		70/50	1,61	1,48	1,40
		60/40	1,21	1,08	1,00
		50/30	0,80	0,67	0,59
	15ºC	60/45	-	1,22	1,14
		50/35	0,94	0,82	0,75
	10ºC	40/30	0,69	0,57	0,49

Water			Air Inlet Temperature		
Coil	Difference	Temperatures	15ºC	18ºC	20ºC
50/40 4 rows	20ºC	100/80	3,26	3,11	3,01
		90/70	2,79	2,64	2,54
		80/60	2,32	2,17	2,07
		70/50	1,83	1,69	1,59
		60/40	1,35	1,21	1,11
		50/30	0,85	0,68	0,58
	15ºC	80/65	2,47	2,34	2,24
		70/55	2,01	1,86	1,77
		60/45	1,53	1,39	1,30
		50/35	1,05	0,91	0,83
		45/30	0,85	0,71	0,63
	10ºC	60/50	1,71	1,57	1,47
		50/40	1,24	1,10	1,00
		40/30	0,77	0,62	0,53

Airtècnics' standard coils can be used in a wide range of temperatures, although output parameters will vary. To get more information and check if certain coils will work for a particular installation, Airtècnics has an air curtain selection tool in its website.

This interactive tool is designed to help clients choose the right air curtain depending on the application and the water temperature, and can calculate the heating output of the standard coils in certain water temperature ranges.

Example of heat capacity calculation:

Model M 2000 P 80/60°C
Air inlet temperature 15°C, Water temperature 90/70°C

HEAT CAPACITY	=	Nominal Power (20,65 kW)	x	Coefficient (1,35)	=	27,87 kW

Selection program

ENERGY SAVING EC MODELS

EC Technology

EC technology (Electronically Commutated) consists of a direct current (DC) motor that incorporates a converter to be able to connect to alternating current (AC).
The static part of the fan (stator) includes an electronic board that transforms the AC to DC current and also allows regulating the fan speed proportionally from 0 to 100%.
EC motor have no slippage losses, thus increasing efficiency versus AC motor.

EC Motor Principle

- DC motor with permanent magnets in the rotor.
- An electronic board controls the electronic switches that replace the carbon brushes.
- An electronic system recognizes the position and direction of rotation of the rotor (software, Hall effect sensors).
- Power supply with alternating current, valid for 50Hz or 60Hz indistinctly.

Advantages and benefits

EC air curtains are extremely efficient reducing the running cost of the ventilation up to 65% using EC instead of AC fans.

- Energy saving: high efficiency, reducing consumption compared to an AC.
- Longer life because the motor works at a lower temperature than an equivalent AC.
- Control: proportional fan speed 0-100% easily controllable with 0-10V regulation.
- Simplicity: 50Hz or 60Hz indistinctly, electronic transformation and power are completely integrated in the motor.

Available EC Air Curtains:

Windbox ECM-ECG, Smart, Kool, Recessed Windbox, Dam, Recessed Dam, Variwind, Recessed Compact, Rund, Zen, Rotowind, Invisair, Windbox BB, Recessed Windbox BB, Zen BB, Invisair BB, Rotowind BB and Kool BB.

EC vs AC air curtain - energy saving up to 65%

How much money can I save using an EC Air curtain?

Example:

Door dimension: 2 m width by 3,8 m height
Running time: 12 hours/day, 6 days/week, 50 weeks (~ 1 year)
Energy cost: 0,17 €/kW/h (EU-27 average cost)
Selected unit: AC: G 2000, EC: ECG 2000

	AC Air Curtain		EC Air Curtain		Difference
Total Fans Power	1,284	kW	0,450	kW	- 0,834 kW
Air Curtain Price	2.500	€/unit	3.127	€/unit	+ 627 €
Energy Consumption	4.622	kW/h	1.620	kW/h	- 3.002 kW/h
Energy Cost	786	€	275	€	- 510 €
CO2 Emissions	1.849	kg	648	kg	- 1.201 kg

Result:
The payback periode is 1 year and 3 months. In addition, 65% of energy and CO2 emissions to the environment are saved every year.

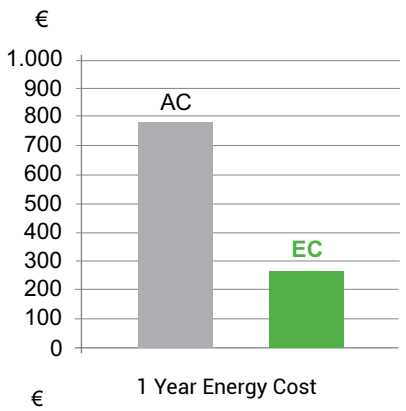

1 Year Energy Cost

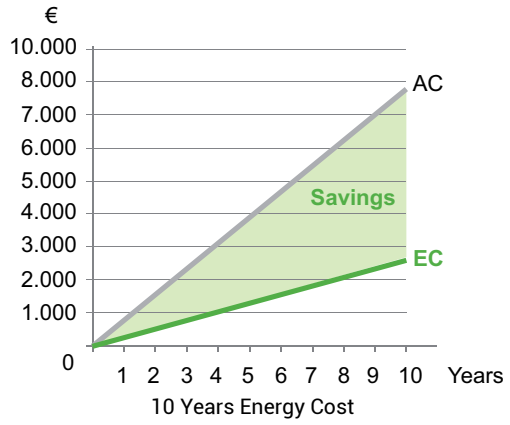

10 Years Energy Cost

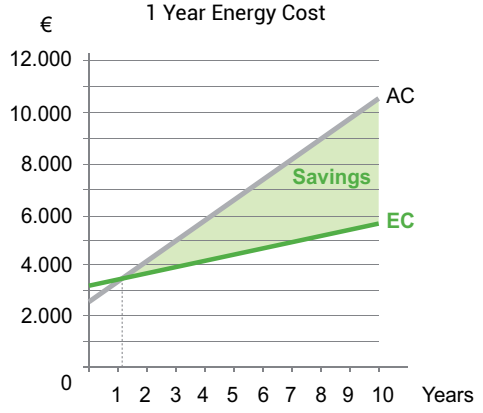

Payback Periode

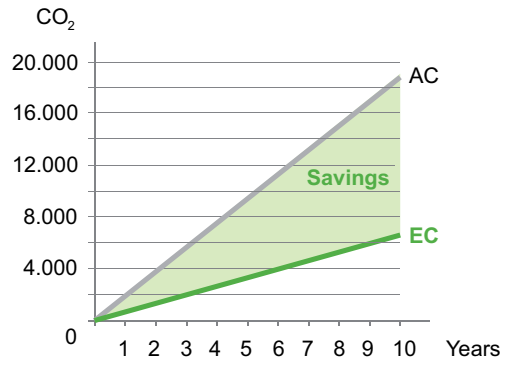

10 Years CO2 Emissions

CONTROL

Advanced regulation: Advanced PRO Control

• **Advanced control for regulating 2 and 5 speed** Airtècnics air curtains. Replaces and improves all previous controls within the basic range (unheated, water heating, electric heating, DX heating), Hand Auto and Interface.
• **2.8" LCD screen** with backlight and capacitive touch buttons. Infrared remote control.
• **Plug & Play connection with RJ11 cable**. Automatic initialization with detection of connected hardware, and configuration according to the detected devices.
• **Robust electronics with electrical and electronic protections**, Poka-yoke connections and protected with varnish to improve corrosion resistance and extend service life.
• **Sensors included**: Integrated room temperature thermostat + door contact.
• **Semi-automatic ECO operation**, with ventilation and heating control based on door status and room temperature.
• **User menu** for setting the set temperature and ventilation and heating according to the door status.
• **Quick access** for setting the set temperature.
• **Internal parameters configuration menu**: Door delay, maintenance programming, speed and heating limitation, control memory, temperature units, auto-cooling program, control lock and boost mode.
• **Alarm and error codes**: Overheating, heating blocked, anti-freeze, fire alarm...
• **Compact ABS plastic housing** with polished finish in white RAL9016 as standard.
Easy opening and closing with snap-in pivots. Optional safety lock with screw.
• **Prepared for wall installation**. Standard wall Fixing points and multiple cable entries on the back cover and sides of the front housing.

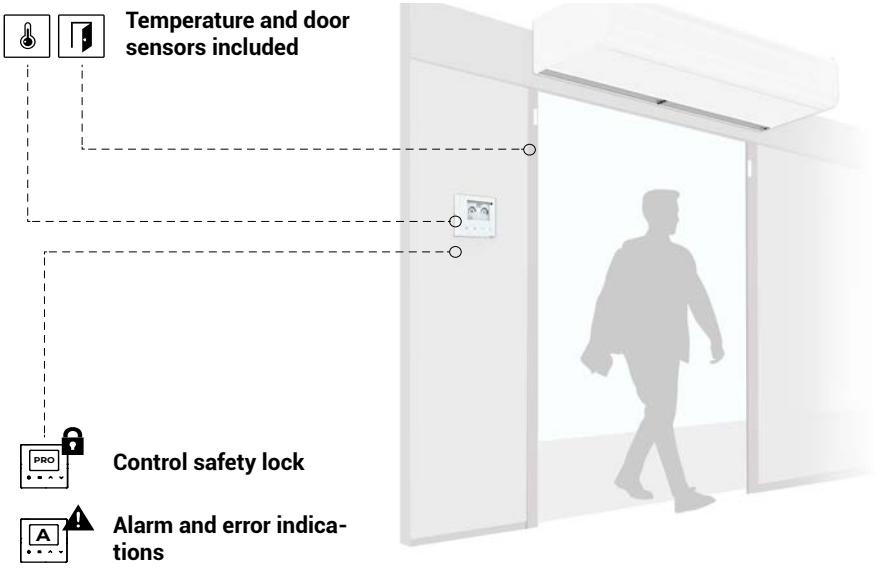

Screen	Management	Control connection	Electronics	PCB protection
LCD 2,8" Backlit	Touch keypad IR remote control	Plug & Play RJ45 Digital IN (x3)	Poka-Yoke connections Electrical protections	Tropicalized

Housing material	Housing finish	Weight	Fire protection	Security screw
ABS UL 94 V0	RAL 9016 Polished surface	144 g	Self-extinguishing	3 x L6 mm optional

CONTROL

Features

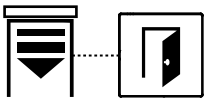

Semi-Automatic ECO Mode: Door status

With the door contact installed, the following functions can be performed:

- **Door Open/Closed:** Allows programming different ventilation speeds and heating stages depending on the state of the door.

- **Door Delay:** When the door is closed, the equipment continues to operate as if the door were open for the programmed time (programmable from 0 to 95 seconds).

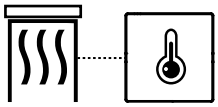

Semi-Automatic ECO Mode: Temperature

With the temperature sensors (one internal included in Advanced Pro, and the other optional external), the following functions can be carried out:

- **Heating control**: Modifies the heating based on the difference between the ambient temperature and the set temperature. With an optional external sensor, it regulates the heating based on the outside temperature when the door is open.

- **Heating modulation:** Gradually regulates the heating when the ambient temperature approaches or moves away from the set temperature, achieving greater comfort and energy savings.

- **Programmable boost**: Increases the set temperature by 2ºC when the door is opened, to improve thermal comfort in winter.

- **Heater function:** With the door closed, the heating continues to run as long as the room temperature is below the set temperature. If the set temperature is exceeded, the curtain stops or continues with only ventilation for when the door is opened again.

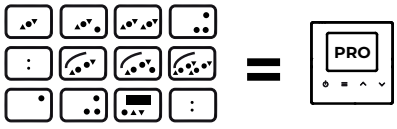

A single advanced control for the entire range

Advanced Pro replaces all controls on the basic Airtècnics previous range of 2 and 5 speeds (without heating, water heating, electric heating, DX heating), Hand Auto and Interface. Now all control models in one.

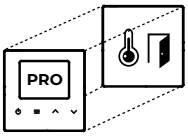

Temperature and door sensors included

Advanced Pro integrates a room temperature sensor and includes a door sensor.
Together with the set temperature, form a system that allows to regulate ventilation and heating while saving energy.

Control safety lock

The control can be locked with a key combination, and the air curtain will continue to operate normally. When the equipment is locked, the user will not be able to perform any action. In addition, when pressing a button, the alarm symbol will appear on the screen and a deeper beep will be heard indicating that the equipment is locked.

BMS external control

External modification (EXT) of operation through potential-free digital inputs that vary depending on the air curtain model.

3 levels of menu

Quick user access menu: With just one click, you can adjust the set temperature on heating equipment.

User menu: Allows to select the ventilation speed, the heating stage for open and closed door, and temperature setting.

Internal parameters configuration menu:
- Door delay (0 to 95 seconds).
- Maximum speed and heating (open/closed door).
- Maintenance/cleaning (0 to 99 weeks).
- Temperature units (ºC or F).
- Control memory (ON by default).
- Boost mode, increases the set temperature when the door is opened (2ºC by default).
- Thermo mode, keeps ventilation running when room temperature reaches Set temp. with closed door.

CONTROL

Advanced regulation: Advanced PRO Control

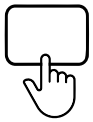

Interface and control panel

The LCD screen displays fan speed, heating stage, room set temperature and optional outdoor temperature, door status, external control, automatic cooling, as well as alarms and errors.

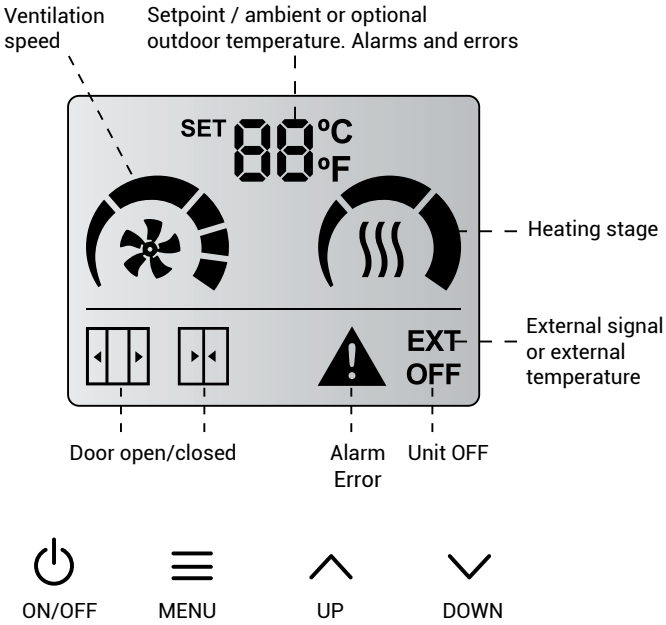

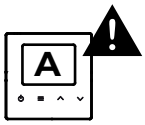

Alarm and error indications

The control will indicate on the display when there is an alarm (A) or error (E), and will show a letter and number in the same place as the temperature. Visually, some icons and the alarm sign will flash.

Alarms: Overheat (A1), Heater blocked (A2), Antifreezing (A3), Communications error (A4), Inappropiate device (A5), Fire alarm (A6).

Errors: Filter/maintenance (E1), Missing device (E2), Missing temperature sensor (E3), Fan error (E4), External alarm (E5).

Technical characteristics

Designed with slots for good ventilation of electronic components.

Standard fixing points on back cover for electrical wall boxes.

Side incisions on both sides of the back cover for easy opening of the case.

Pre-cut holes in the back cover for the entry of cables of different sizes, easily removable with a tool.

The main casing has breaking zones of two different sizes, two located on each side and one at the bottom.

Easy opening and closing with snap-on pivots. Optio-nal safety lock with screw.

Multiple air curtains connection

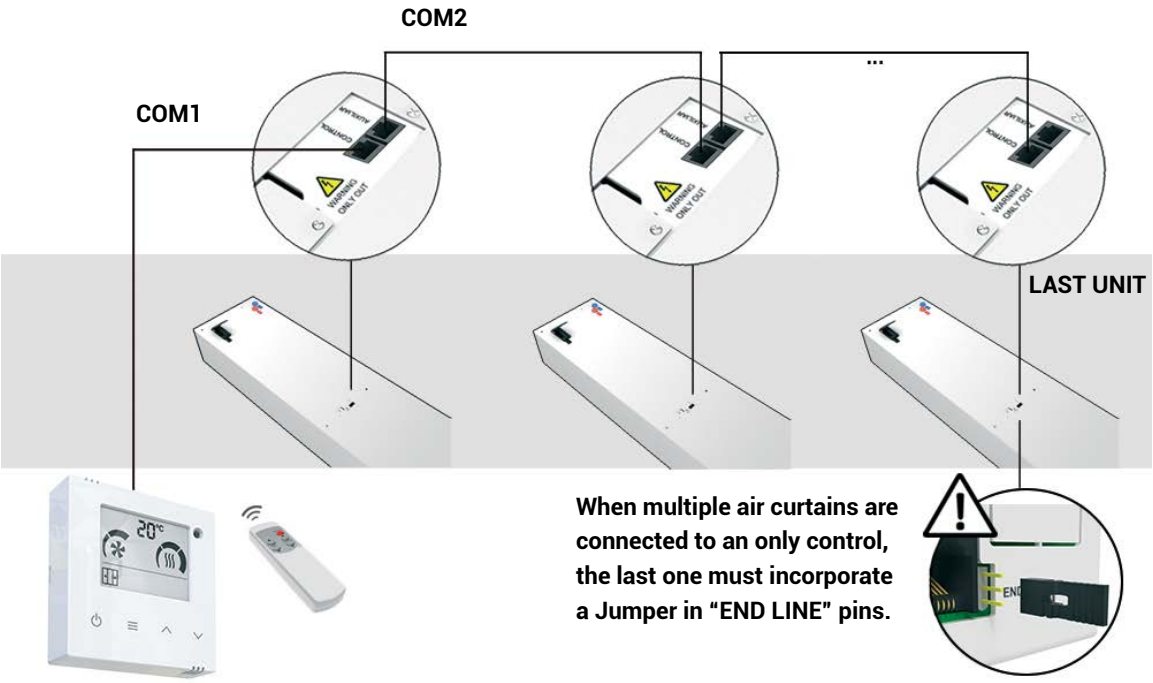

COM1/COM2 (interchangeable)

Easy to manage several units using only one control panel.

Add-ons connection

There are three available heated air curtain configurations achieved with the Add-ons below displayed:

- Electrical heating in internal connection
- Water heating with ON/OFF valve (230Vx1)
- Water heating with modulating valve (0-10V)
- Heat pump heated (HP).

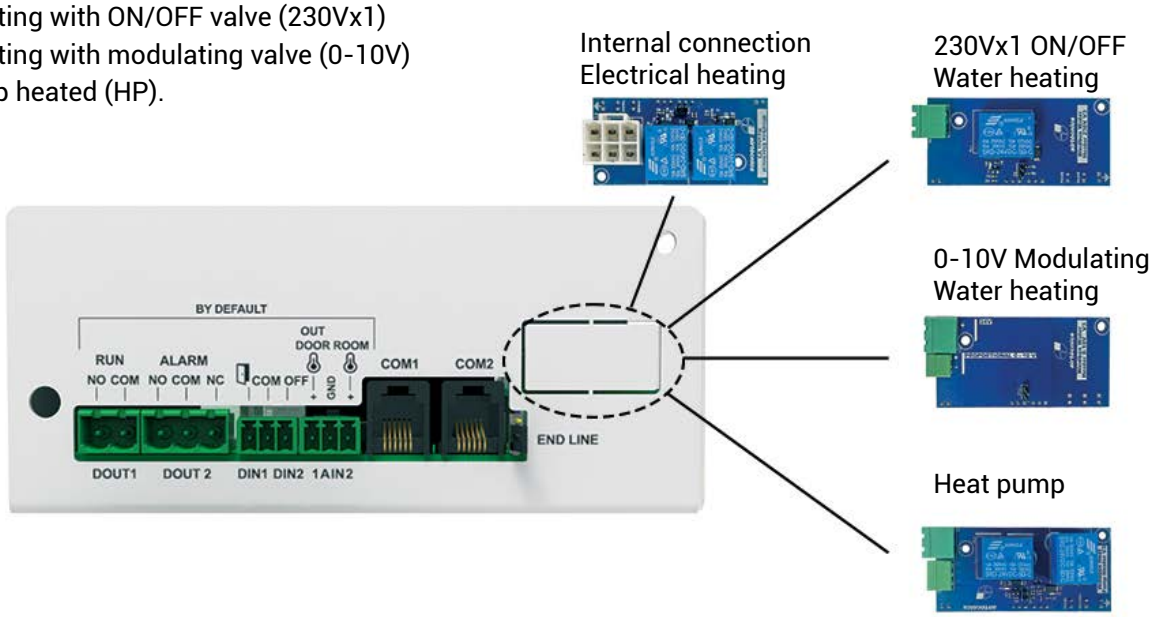

CONTROL

Advanced regulation: Clever PRO Control

INTELLIGENT
PROACTIVE
REGULATION

Air curtains regulation is essential to substantially reduce energy consumption.

Our latest technology control system allows to manage the operation of the air curtains automatically according to each situation, maintaining indoors comfort with maximum energy savings.

Clever control automatically adapts the functioning of the air curtain to the entrance conditions, mantaining comfort while saving energy. It optimizes the ventilation and heating to make an efficient barrier for an optimal climate separation.

Basic and advanced modes

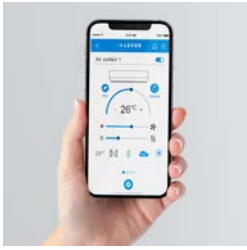

Conectivity
Modbus BMS and control via APP

Easy
Plug & Play
installation

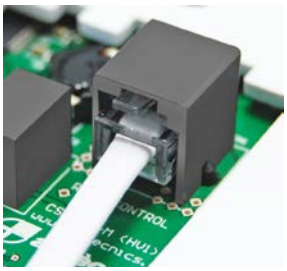

Regulation with **valves:** thermostatic, solenoid, modulating

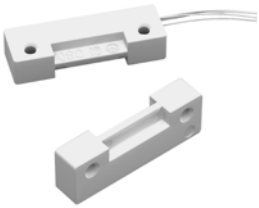

Ambient thermostat and external temperature **sensors**

Special Requirements

Airtècnics can produce units with special requirements under request.

• External alarm signals: unit working, heating ON, airflow switch, dirty grille, electronic overheating signal, fans overheating thermal contact TK, electrical heating blocked, etc.
• Water or steam coils for higher temperatures or different power than standard.
• Special heating elements at desired power and power supply.
• Dummies (empty air curtains) to combine with working units.
• Industrial air curtains with ATEX fans.

CONTROL

Clever PRO Control features:

USER FRIENDLY DESIGN

Multilanguage and intuitive icons for easy understanding.
Main state screen: ventilation speed, heating, temperatures, door state, working mode and program, filter state, day/hour, timer, etc. 3 different menu configurations depending on who is managing the equipment.

FILTER ALARM

Indicates when filter needs replacing/cleaning. 2 options: by "Timer"of functioning hours or by "Pressure Sensor" switch.

ADAPTIVE DOOR DELAY

Air curtain delay: when the door closes, the air curtain remains working at door open conditions for certain time to be ready if it opens again.
Door opening delay: the door remains closed until the air curtain achieve the nominal speed.

TIMER

To turn ON or OFF automatically the unit depending on each different day of the week or predefined groups of days. User can select between Day or Night modes with 2 different Set temperatures.

COMPATIBLE

BMS communication with Modbus RTU protocol or using digital and analogical IN/OUT to control or monitor directly the unit.

ENERGY SAVING

3 grades of comfort and energy efficiency.

FULLY PROGRAMMABLE

All parameters can be configured at Basic or Advanced menu.
Lots of extra functions to fulfill all clients applications. Customizable device names for easy identification.

MULTI-EQUIPMENT

Clever works with different types of units: air curtains, fan heater, AHU, etc. Once programmed, PCB can work by itself without any controller.

- Clever Control is factory adjusted according to the device/s and client requirements.
- Once installed, the system checks automatically all connected units and its temperature sensors.
- Different integrated programs and functions for particular applications.
- Multiple programs depending on installed temperature sensors: inside, outside and air jet.
- Able to regulate by itself the ventilation and heating depending on: door state, temperature sensors, selected working mode, grade of energy.
  saving, program and other parameters.
- Alarms: general, filter state, anti freezing, overheating, fans overheating, airflow, fire, external, heating locked, etc.
- Security control buttons lock option by code.
- Modulating valve for water heated (includes 24VDC power supply).
- Multiple functions: temporized door, excessive temperature of water return, cooling mode and others.

GALLERY

Minibel
Ideal for small openings (service windows)

Optima
Installation in a shop entrance

Windbox M,G
Classic standard design

Smart
Elegant and discreet design with hidden inlet grille

Dam
With smooth customizable front panel in a fashion store

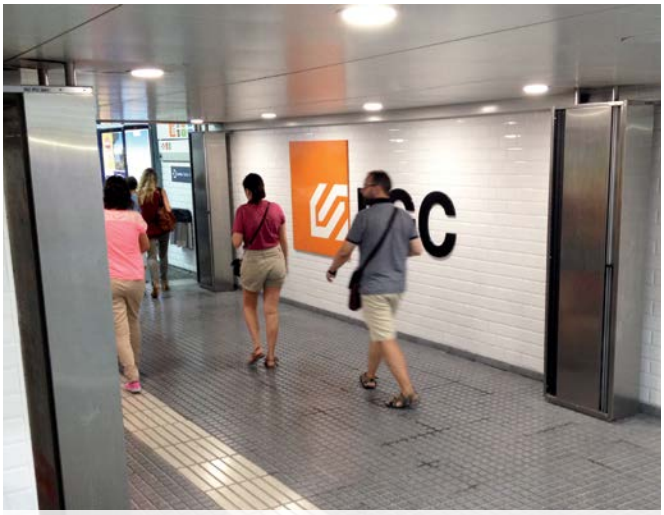

Dam Twin
System with two curtains for adverse situations

GALLERY

Zen
Elegant with aluminium panels in an offices building

Zen
Exclusive design with custom finishes

Zen
With wood panels in a chain restaurant

Rund
Rounded, vertical and in stainless steel design

Rund
Tailor made-linear installation for large openings

Rund
Installation with special goalpost supports

GALLERY

Recessed Windbox
Integration in false ceiling in a shopping center

Windbox M,G
Invisible installation with false ceiling kit

Recessed Optima
Designed to install in false ceiling, custom finishes

Recessed Dam
Model with exposed inlet grille

Invisair
Fully invisible horizontal installation integrated in a bulkhead

Invisair
Fully invisible vertical installation integrated in a bulkhead

GALLERY

Rotowind
Tailor-made design for all types of revolving doors

Rotowind
Tailor-made design for all types of revolving doors

Rotowind
Special solution for glass revolving doors

Windbox L,XL
Multiple installation of industrial curtains in a factory

Windbox L,XL
Multiple modular towers on a large hangar door

Maxwell
Jet with Coanda effect for industrial doors

TOP REFERENCES

Production for world renowned brands

See all references

See all installation photos

TOP REFERENCES

Sagrada Familia (Barcelona, Spain)
Alhambra (Granada, Spain)
Eiffel Tower (Paris, France)
IKEA (Badalona, Spain)
Ferrari (Las Rozas, Spain)
United Nations Palace (Geneva, Switzerland)
El Prat Airport (Barcelona, Spain)
JFK Airport (New York, United States)
Atocha Station (Madrid, Spain)
Lego Paseo de Gracia (Barcelona, Spain)
Louvre Museum (Paris, France)
National Theater (London, UK)
Apple Headquarters (London, UK)
Nike Paseo de Gracia (Barcelona, Spain)
Hugo Boss (Dublin, Ireland)
Zara (Milan, Italy)
Porsche (Stuttgart, Germany)
BBVA Headquarters (Bilbao, Spain)
Telefónica Factory (Madrid, Spain)
Würth factory (Kouvola, Finland)
Aston Martin F1 Team (Silverstone, UK)
BASF factory (Milan, Italy)
American Naval Base (Juffar, Bahrain)
Hilton Hotel (Addis Ababa, Ethiopia)
Disneyland (Paris, France)
Port Aventura (Salou, Spain)
Camp Nou (Barcelona, Spain)
San Siro (Milan, Italy)
Circuit de Catalunya F1 (Montmeló, Spain)
Station of HIA (Doha, Qatar)

DISTRIBUTORS

With presence in all continents and export to more than 45 countries

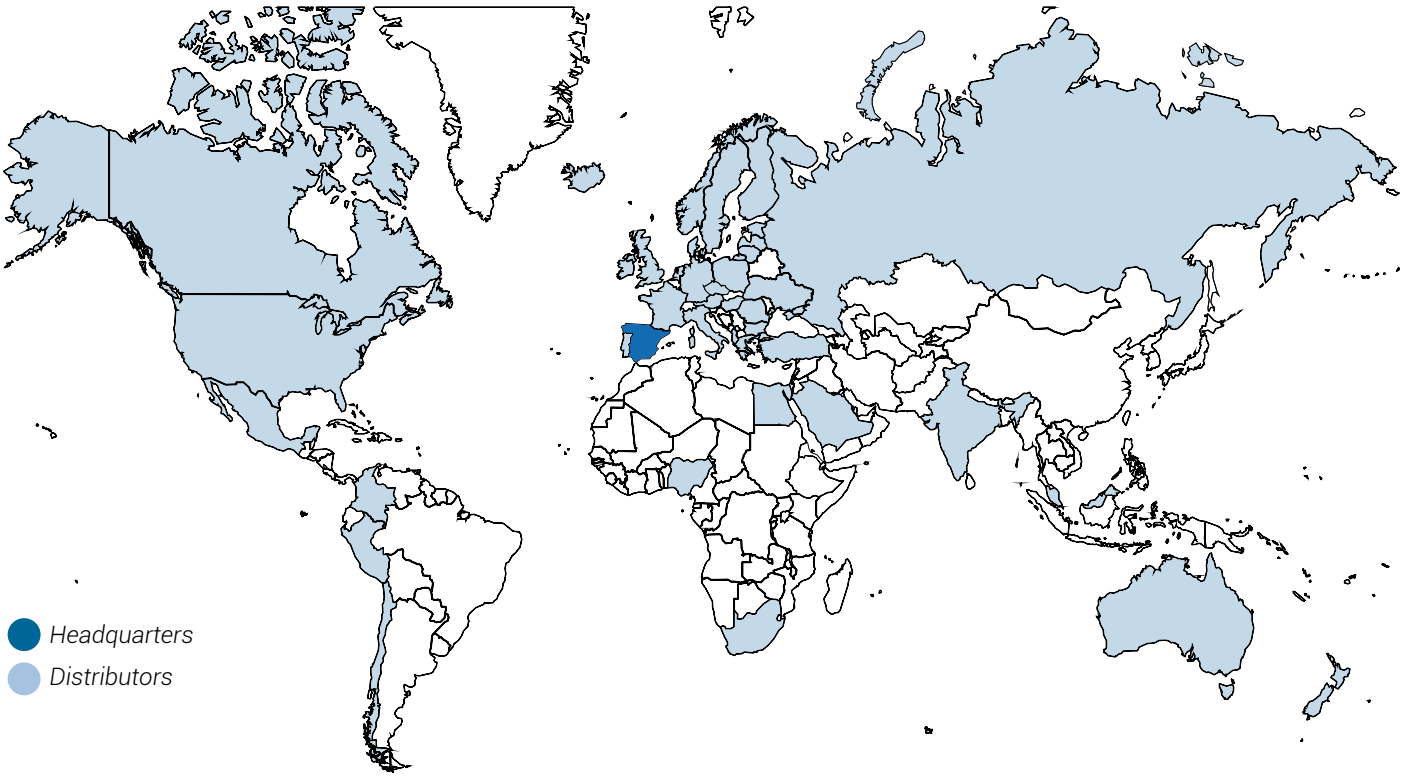

Europe

Albania, Estonia, Ireland, Portugal

Austria, Finland, Italy, Romania

Belgium, France, Latvia, Slovenia

Bosnia and Herzegovina, Germany, Lithuania, Spain

Croatia, Greece, Netherlands, Sweden

Czech Republic, Hungary, Norway, Ukraine

Denmark, Iceland, Poland, United Kingdom

Asia

Azerbaijan, Qatar

Bahrain, Russia

India, Saudi Arabia

Israel, Singapore

Jordania, Turkey

Lebanon, United Arab Emirates

Malaysia, Vietnam

America

Canada

Chile

Colombia

Ecuador

Mexico

Peru

United States of America

Africa

Morocco

Egypt

Nigeria

South Africa

Oceania

Australia

New Zealand

DISTRIBUTORS

Albania
AIRTECHNIC Hatzoudis Ltd
Agiou Antoniou 19 & Xirokrinis,
Ano Patisia, 11 142 - Athens
Phone: +30 2117055500
www.airtechnic.gr
sales@airtechnic.gr

Australia
ROSENBERG AUSTRALIA
87-89 Woodlandss Drive
3195 - Braeside, Victoria
Phone: +61 39587 8233
www.rosenbergaustralia.com.au
info@rosenbergaustralia.com.au

Austria
ROSENBERG GMBH AUSTRIA
Maisstrasse 15
4600 - Wels
Phone: +43 7242 72181
www.rosenberg.at
info@rosenberg.at

Azerbaijan
CASPIAN SERVICE LLC
Z. Ahmedbekov 14 Baku
Phone: +994 12 598 00 91
www.caspianservice.com
a.gurban@caspianservice.com

Bahrain
EUROTEK INTERNATIONAL TRA-
DING
Office no. 22 || Bldg 312 || Rd 5804 ||
Block 358Zinj - Kingdom of Bahrain
Phone: +973 17 341 349
Mobile: +973 39 477 924
info@eurotektrading.com

Belgium
ROSENBERG BELGIUM NV
Mallaardstraat, 9 9400 - Ninove
Phone: +32 54335835
www.rosenberg.be
info@rosenberg.be

Bosnia and Herzegovina
ROSENBERG KLIMA BH O.D.
Tvornička 3
71000 Sarajevo
Phone: +387 (0) 33 845 000
adis.pajtic@rosenberg-klima.si

Canada
AIRTECNICS NORTH AMERICA
1210 Mid-Way Blvd. Unit 20
Mississauga ON Canada L5T 2B8
Phone: 1- 866 565 1038
https://airtecnicsnorthamerica.com
info@airtecnicsnorthamerica.com

Chile
AIRTECNICS CHILE
Av. Nva. Los Leones, 07 - 4º
Providencia, Santiago de Chile
Phone: +56 2 2321 8000
Mobile: +56 9 9779 8262
chile@airtecnics.cl

Colombia
SOLUMAT SAS
Cra. 42 ##46-253, Itagüi,
Antioquia Medellín
Phone: +57 (4) 4440505
https://www.solumat.com.
cosolumat@solumat.com.co

Croatia
INDUSTRY IMPEX D.O.O.
Vranjicki put 48
21 000 - Split
Phone: +385 21 540 690
Mobile: +385 98 264 448
info@hitachi-klime.hr

Croatia
VENT KONCEPT D.O.O.
Doljani 3
HR-10000 ZAGREB
Phone: +385 1 2338 355
igor@ventkoncept.hr

Czech Republic
ROSENBERG S.R.O
Klencí pod Cerchovem, 101
345 34 - Klenci pod Cerchovem
Phone: 420 379775811
www.rosenberg.cz
info@rosenberg.cz

Denmark
2K APS
Odensevej 128
DK-4700 Næstved
Tel.: +45 2888 6674
www.2k.dk
info@2k.dk

Ecuador
ROJAS CEPERO HERMANOS S.A.
AV. Colon E11-36 y de 12 de
Octubre. Quito, Ecuador
Phone: +593 99 094 9377
https://rojasecuador.com
camilaleuro@rojasecuador.com

Egypt
ROSENBERG EGYPT
11 EL Gamaa st.
ET-Giza, Cairo
Phone: 202 4043306
www.rosenbergegypt.com
samir_ayad@mail.com

Estonia
ETS NORD
Peterburi tee 53
11415 Tallinn
Phone: 372 680 7365
pakkumised@etsnord.ee

Finland
ETS NORD
Pakkasraitti 4
04360 Tuusula
Phone: 358 40 184 2842
info@etsnord.fi

France
EXELTEC
7 Rue des Maraîchers
Parc d´Orchat
69120 - Vaulx en Velin
Phone: +04 78 82 01 01
www.exeltec.fr
info@exeltec.fr

Germany
ROSENBERG BREMEN GMBH
Auf den Sandbreiten, 3
28719 - Bremen
Phone: +49 421642031
www.rosenberg-nord.de
contact@rosenberg-nord.de

Germany
ROSENBERG VENTILATOREN
Maybachstrasse,1/9
D-74653 - künzelsau - Gaisbach
Phone: +49 79401420
www.rosenberg-gmbh.com
info@rosenberg-gmbh.com

Germany
ROSENBERG VENTILATOREN GMBH
Niederlassung Rhein-Ruhr
Am Schomm - 41199 Mön-
chengladbach
Phone: +49 2166/84670-0
www.rosenberg-gmbh.com
info-rhein-ruhr@rosenberg-gmbh.
com

Greece
AIRTECHNIC
Agiou Antoniou 19 & Xirokrinis,
Ano Patisia, 11 142 - Athens
Phone: +30 2117055500
www.airtechnic.gr
sales@airtechnic.gr

Hungary
ROSENBERG HUNGARIA
Joszef A.u.34. (Hauptstr. Nr.10),
Pf.6.
2532 - Tokodaltaro
Phone: +36 33515515
www.rosenberg.hu
budapest@rosenberg.hu

DISTRIBUTORS

Iceland
KAELISMIOJAN FROST EHF.
Fjolnisgata 4b
603 - Akureyri, Reykjavic
Phone: 354 4649400
www.frost.is
frost@frost.is/charles@frost.is

India
ROSENBERG VENTILATION SYSTEMS INDIA PVT
Savitri Warehouse Compound
Sr. nº32 Hissa nº 2A/3/2 Pisoli-Kondhwa Road, 411028TALUKA HAVELI,PUNE-INDIA
Phone: +0091 2024242800
keyur.shah@rosenbergindia.com

Ireland
IRISH VENTILATION & FILTRATION
Unit C, 390 Clonard Road
12 - Crumlin, Dublin
Phone: 353 14925003
www.irishvent.ie
sales@irishvent.ie/elton@irishvent.ie

Israel
PC HETZ LTD
7 Hamasbir58856 - Holon
Phone: +39 026107952
www.eurotecn.it
info@eurotecn.it

Italy
EUROTECNO S.R.L.
Via A. Villa,16
20091 - Bresso, Milano
Phone: 972 35582324
http://www.pchetz.com
ys@pchetz.com

Jordania
PESCA AGRICULTURAL COMPANY
47 Mecca Street, Al Khayrat Complex, AMMAN90273
Phone: 009626551520
Mobile: +962 7 9534 6615

Latvia
CONDAIR
Vārnu street 7
1009 - Riga
Phone: 371 29228253
www.condair.lv
condair@condair.lv

Lebanon
KBE INTERNATIONAL
Industrial City, Roumieh Highway, Nahr - El - Mott, 90691 Beir - Beirut
Phone: 961 1 898268
www.kbeinternational.com
kbe@kbelebanon.com

Lithuania
ROSENBERG BALTIC
Metalistų g. 8, 4 korpusas
LT-78136 - Šiauliai
Phone: 370 412 111 00
www.rosenberg.lt
vladas.beslovas@rosenberg.lt

Malaysia
RESOURCE DATA MANAGEMENT ASIA SDN. BHD.
47650 Subang Jaya, Selangor
Phone: +603 5022 3188
www.resourcedm.com
asiasales@resourcedm.com

Mexico
INDUSTRIAS ROSVENT S.A. de C.V.
Camino Rio la Silla Num 191-a, Fracc.
Industrial Los Lermas, 67190 Guadalupe
Phone: 52 81 8127 5007
www.rosvent.com.mx
info@rosvent.com.mx

Morocco
SOGETHERM
7 Rue Raphael Mariscal – Casablanca
Tel Phone: +212 522 800 313
https://www.sogetherm.com
contact@sogetherm.com

Nigeria
OZED LIMITED
Off Ola - Aynde Streetikeja, Lagos
Phone: +234 803 493 8204
o.tony@ozedinternational.com

Netherlands
AIRTECNICS LUCHTGORDIJNEN NEDERLAND BV
Wagenmakerij 15, 4762
- AV Zevenbergen
Phone: 31 0168335243
www.airtecnics-luchtgordijnen.nl
info@airtecnics-luchtgordijnen.nl

New Zealand
SETPOINT SOLUTIONS LTD
59b Carlyle Street Sydenham
PO Box 748 - Christchurch 8240
Phone: 64 3 377 2773
www.setpoint.co.nz
info@setpoint.co.nz

Norway
AIRPRODUCT AS
Tvetenveien 164
671 - Oslo
Phone: 47 22761410
www.airproduct.no
post@airproduct.no

Norway
ENERGI & KLIMATEKNIKK AS
Baker Østbys vei 5
1351 RUD
Phone: +47 67 17 20 00
www.ek-teknikk.no
post@ek-teknikk.no

Peru
ENERGY PROJECT GROUP
calle Isaac Recavarren 183, Santa Anita, Lima
Phone: 511 3622644
www.epg.com.pe
proyectos@epg.com.pe

Poland
ROSENBERG KLIMA POLSKA
ul. Plantowa 5
05-830 - Nadarzyn
Phone: 48 22720 6773
www.rosenberg.pl
biuro@rosenberg.pl

Portugal
EFAFLU
Rua S. Brás, 269 Apartado 23
4494-909 - Póvoa de Varzim
Phone: 351 252 298 700
www.efaflu.pt
vendasnorte@efaflu.pt

Qatar
ORONTES LLC
P.O. Box: 92862
Doha, Qatar
Phone: 974 4411 6621
www.orontes.com.qa
orontes@qatar.net.qa

Romania
ROSENBERG ROMANIA
Str. Emil Racovita, 25
41753 - Bucaresti
Phone: 40 214606790
www.rosenberg.ro
office@rosenberg.ro

Russia
ROSENBERG RUS LLC
2nd Roschinskiy proezd, 8/4
115419, Moscow,
Russian Federation
Phone: +7 495 740-9111
www.rosenberg-rus.ru
eduard.filin@rosenberg-rus.ru

Saudi Arabia
SANA CREATIVE ENG.SOLUTIONS VE SERVICES CO
Al Falah, otman bin Affan road
Riyadh Saudi Arabia Al.Othaim Building
Phone: +966 595 079 574
info.trading@saudisana.com

DISTRIBUTORS

Singapore
ROSENBERG EAST ASIA Pte Ltd
Blk-40 Ubi Crescent #01-03 Ubi Techpark
408567 - Singapore
Phone: 65 6846 8866
www.rosenberg-gmbh.com
roseasia@singnet.com.sg

Slovenia
ROSENBERG KLIMA D.O.O.
Brodisce 26
1236 - Trzin
Phone: 386 15636492
www.rosenberg-klima.si
info@rosenberg-klima.si

Spain
AIRTECNICS (HEADQUARTERS)
C/Conca de Barberà, 6
08211 - Castellar del Vallès
Phone: 34 93 7159988
www.airtecnics.com
airtecnics@airtecnics.com

AIRTECNICS (MADRID OFFICES)
Paseo de Extremadura 226
28011 Madrid
Mobile: 660 47 42 84
Lcastillejo@airtecnics.com

Sweden
CURANT TRADING AB
Tomtebogatan 4
SE-703 4 - Örebro
Phone: 46 1916 7490
www.curant.se
info@curant.se

South Africa
FISCHLI & FUHRMANN (PTY) LTD
11 Lathe Street, Isando,
JohannesburgP.O. Box 253, Isando, 1600,
South Africa
Phone: + 27 (11) 974 5571
www.fifu.co.za
info@fifu.co.za

Turkey
AKCOR HAVALANDIRMA SISTEMLERI
CL/Vefa Deresi Sok. Gayrettepe Is
Merkezi, Nº 5 A Block Daire Gayrettepe
90355 ISTAMBUL
Phone: 00 902123279191
www.akcor.com.tr
arizalma@akcor.com.tr

Ukraine
AIR STREAM Ltd
Street Gorkogo 11/1
49083 - Dnepropetrovsk
Phone: +38 (056) 735 99 79
www.air-stream.com.ua
axia.ua@gmail.com

Ukraine
ROSENBERG UKRAINA TOB
Dubrovitzkaja Str. 28
04114 - Kiev
Phone: 380 44 255 1949
www.rosenberg-gmbh.com.ua
info@rosenberg-gmbh.com.ua

United Arab Emirates
ROSENBERG MIDDLE EAST FZC
Sharajah Airport P.O BOX 9110
9110 - Sharajah, Dubai
Phone: 971 65574248
www.rosenberg-gmbh.com
shawqi.baker@rosenberg-gmbh.com

United Kingdom
JS AIR CURTAINS LTD
Artex avenue, Rustington
BN16 3LN - Littlehampton, West
Sussex
Phone: +44 (0) 333 0384240
www.jsaircurtains.com
info@jsaircurtains.com

United States of America
AIRTECNICS NORTH AMERICA
1210 Mid-Way Blvd. Unit 20
Mississauga ON Canada L5T 2B8
Phone: 1- 866 565 1038
https://airtecnicsnorthamerica.com
info@airtecnicsnorthamerica.com

Vietnam
DOUBLE WIN
1B1 Thanhthai Street, Ward 14,
District 10
Hochiminh City
Phone: (84.28) 38627870
https://doublewin.com.vn
info@doublewin.com.vn

Conca de Barberà, 6 - Pol. Ind. Pla de la Bruguera
E-08211 Castellar del Vallès (Barcelona) Spain
+ 34 93 715 99 88
airtecnics@airtecnics.com

www.airtecnics.com

NOFCAT03536 2026R3
We reserve the right to modify design and specifications without prior notice.